# Anderton

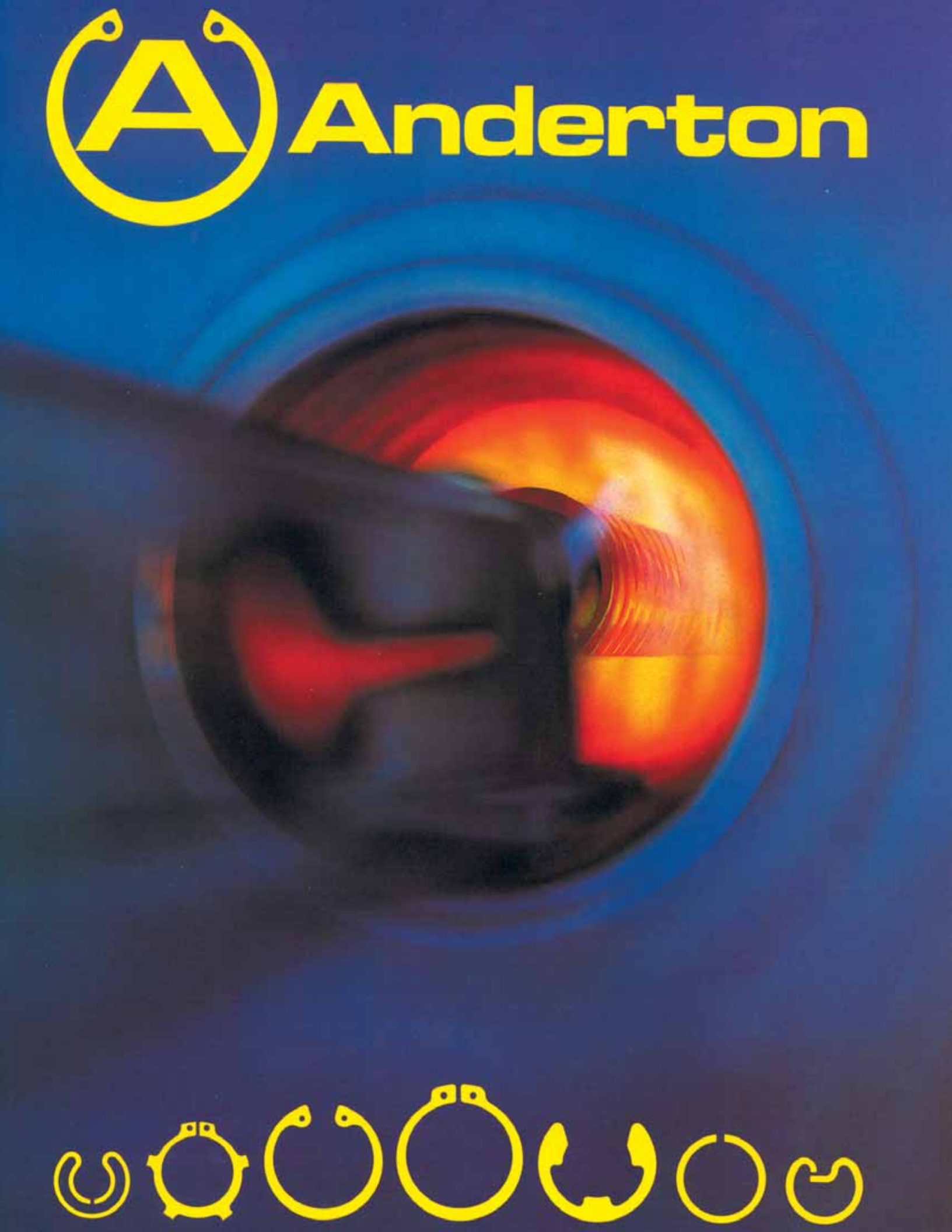

# CONTENTS


| | | | | | |
|---|---|---|---|---|---|
| **SHIMS** PAGE 13 | **SUPPORT RINGS** PAGE 13 | **D1300** PAGE 14/15 | **D1400** PAGE 16/17 | **N1300** PAGE 18/19 | **N1400** PAGE 19/20 |
| **D1460** PAGE 21 | **N1460** PAGE 22 | **B1500** PAGE 22 | **D1500** PAGE 23 | **N1500** PAGE 23 | **N1501** PAGE 24 |
| **N1540** PAGE 24 | **N1800** PAGE 25 | **A1500 'U'** PAGE 25 | **A1500 'C'** PAGE 25 | **A1500 'S'** PAGE 25 | **M1800** PAGE 26 |
| **D2000** PAGE 27 | **D2100** PAGE 28 | **M3200** PAGE 29 | **M2300** PAGE 30 | **M2400** PAGE 31 | **A0500** PAGE 32 |
| **A0600** PAGE 33 | **A0700** PAGE 33 | **A0900** PAGE 34 | **A1000** PAGE 34 | **M2500** PAGE 34 | **A1100** PAGE 35 |
| **A1200** PAGE 35 | **M1700** PAGE 35 | **N1302** PAGE 36 | **M1440** PAGE 37 | **N1440** PAGE 37 | **N1305** PAGE 37 |
| **M1465** PAGE 38 | **N1465** PAGE 38 | **M1308** PAGE 39 | **M1408** PAGE 40 | **N1308** PAGE 41 | **N1408** PAGE 41 |
| **PLIERS** PAGE 42 | **APPLICATORS** PAGE 43 | **STACKFEEDAS** PAGE 43 | **VISIPACKS** PAGE 44 | | |


**FOR ORDERING CODE SEE PAGE 12**

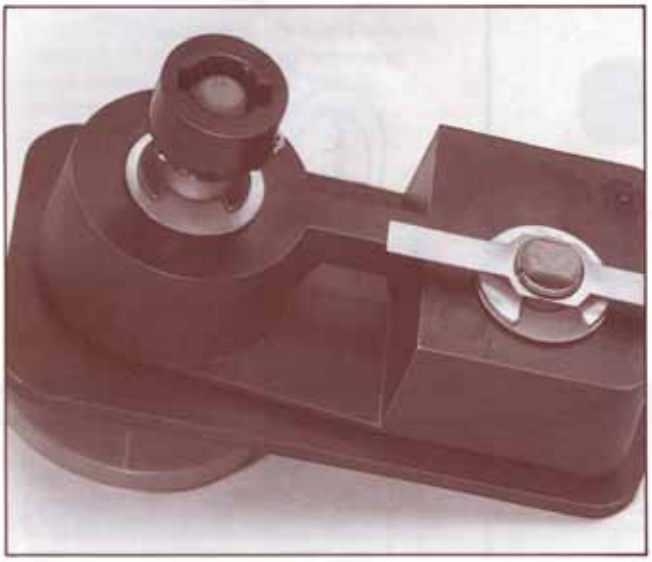

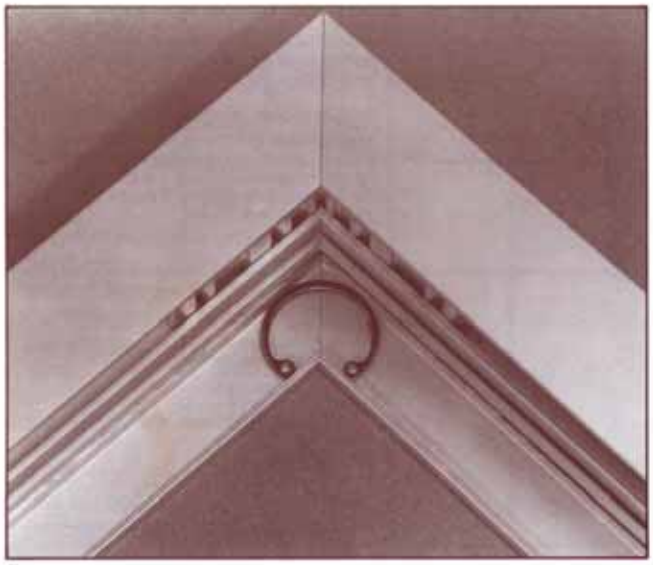

Anderton International Limited, the leading U.K. manufacturer of circlips and retaining rings offer a complete service to all fastener users - products which are manufactured under strictly controlled conditions to all International standards, a technical back up team to advise on applications of our products and our Integrated Quality Control System which ensures that our components consistently meet the safety critical functions to which they are often subjected in service.

Our policy is to produce circlips of unequalled performance at competitive prices and to extend the use and application of this inherent low cost fastening device. Anderton can draw on wide and extensive experience over many years in assisting designers and engineers to select the most suitable fastener in line with the parameters of the application. Also where special requirements demand, we can provide a consultancy service to determine the best solution to give optimum performance. As our circlips are manufactured from different materials, including carbon steel, phosphor bronze, beryllium copper and stainless steel and can be supplied in a variety of finishes including phosphated and plated, it is essential that the right selection is made to fulfil all the design criteria.

Supplies to meet the requirements of CAA (Civil Aviation Authority) and the DQAB (Defence Quality Assurance Board) are taken from normal production. The stringent specifications laid down by these two authorities ensures that all products from our ranges meet and satisfy the most demanding requirements and perform with utmost reliability even under arduous conditions.

**METRICATION**

In line with our policy of metrication, most sizes of standard imperial internal and external circlips will be supplied as their metric equivalents. Other sizes which have no metric equivalent may be available on request.

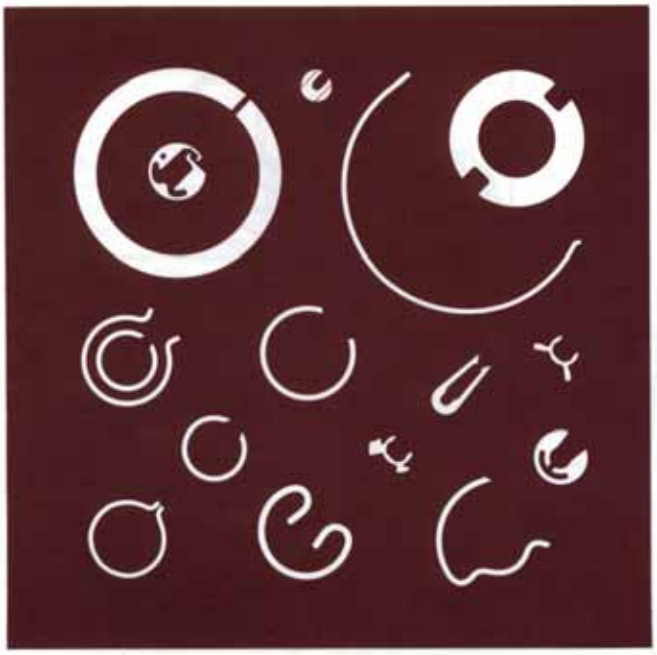

**SPECIALS**

Assuming economical batch quantities are required, circlips can be produced to a customer's individual designs and specifications, and receive the same close attention to application, design and manufacture as do our standard products. Where certain application requirements necessitate dimensional variations from standard specifications, we shall be pleased to advise on the amended performance under these conditions.

For further information consult Anderton

## SECTION 1
### INTERNAL CIRCLIPS - 1300 TYPE & VARIANTS REQUIRING GROOVES

**TYPE** - Internal, i.e. are closed down (with the aid of circlip pliers) to pass down a bore and then released to spring outwards into a groove. Tapered section ensures even pressure when fitted.

**NOMINAL SIZE** - The nominal size refers to the bore through which the circlip is designed to pass.

e.g. D1300-0250 is for 25 mm Bore.
N1300-0025 is for 0.250" Bore.

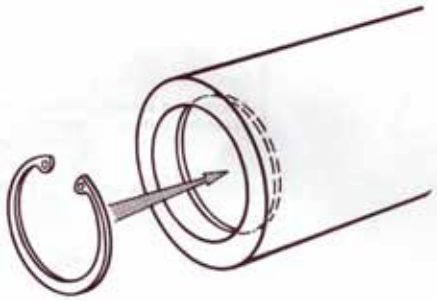

| PROFILE | DESCRIPTION | PROFILE | DESCRIPTION |
|---|---|---|---|
| 1300 | BASIC INTERNAL<br>The most common form of internal which is suitable for most normal engineering applications. Simply acts as a rigid shoulder within a bore. | 1308 | INVERTED INTERNAL<br>High clearance diameter.<br>Designed to give low shoulder height and is used in applications where the relatively large 1300 type lugs may not be acceptable.<br>Smaller sizes in particular are also better dynamically balanced than standard 1300 types. |
| 1301 | BOWED INTERNAL<br>Provides resilient end play take up.<br>This type of circlip acts in a similar way to a spring giving resilient retention.<br>Used to take up tolerances in an assembly so that any 'slack' is removed.<br>Reverts to a rigid retainer if the applied load is such that the circlip is flattened. | 2000 | INCREASED ABUTMENT<br>Additional lugs provide extra abutment area.<br>Used to maintain full contact with retained parts having large chamfers or radii which would otherwise contact the circlip only at the lug and 'beam'. This ensures more even load distribution. |
| 1302 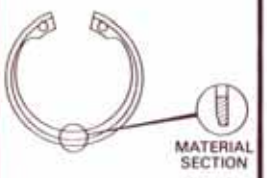  | BEVELLED (CHAMFERED) INTERNAL<br>Provides rigid end play take up.<br>Used to take up tolerances in an assembly, but unlike 1301 type, will not flex when in place.<br>Works by expanding into mating groove chamfer where the circlip 'rides' forward to contact the retained part. 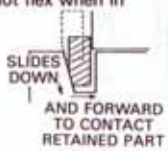  | 1360 | REINFORCED INTERNAL<br>Design based upon 1300 type but with increased thickness.<br>Used where shock loading is a factor. Also used where high static loads are combined with radiused or chamfered abutment (due to its increased resistance to conical deformation). |

## SECTION 2
### EXTERNAL CIRCLIPS 1400 TYPE & VARIANTS REQUIRING GROOVES

**TYPE** - External axially applied, i.e. are expanded (with the aid of circlip pliers) to pass over a shaft and then released to spring back into the groove. Tapered section ensures even pressure when fitted.

**NOMINAL SIZE** - The nominal circlip size refers to the shaft over which the circlip is designed to pass.

e.g. D1400-0400 is for a 40 mm Shaft.
N1400-0100 is for a 1.00" Shaft.

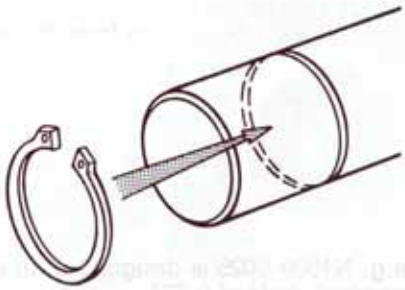

| PROFILE | DESCRIPTION | PROFILE | DESCRIPTION |
|---|---|---|---|
| 1400 | BASIC EXTERNAL<br>Suitable for the majority of normal engineering applications, providing a rigid, yet tough, load bearing shoulder on a shaft. | 1401 | BOWED EXTERNAL<br>Provides resilient end play take up.<br>Acts in similar way to a spring providing a resilient abutting shoulder.<br>Used to take up tolerances in an assembly so that any 'slack' is removed.<br>If the applied load becomes great enough to flatten out the bow, then the circlip reverts to a rigid retainer. |

| PROFILE | DESCRIPTION | PROFILE | DESCRIPTION |
|---|---|---|---|
| 1402 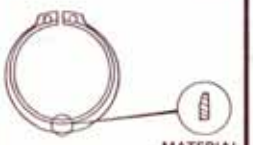  | BEVELLED (CHAMFERED) EXTERNAL<br>Provides rigid end play take up.<br>Takes up a limited amount of play in an assembly but unlike the 1401 type will not flex when fitted.<br>Works by contracting into the mating groove chamfer, where the circlip 'rides' forward to contact the retained part. 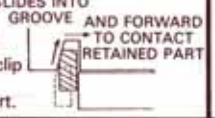  | 1460 | REINFORCED EXTERNAL<br>Design is based upon the standard 1400 series but with increased thickness and in the case of the American series increased section depth.<br>Used to withstand shock loads and also to resist conical deformation where, for example, large abutment radii are present. |
| 1408 | INVERTED EXTERNAL<br>Reduced clearance diameter.<br>Provides low shoulder height for applications where the relatively large lug of the 1400 type is unacceptable. The fitted profile is also 'tidier'.<br>Small sizes in particular are better dynamically balanced than the standard 1400 type. | 2100 | INCREASED ABUTMENT<br>Additional lugs provide increased abutment area.<br>Especially useful for maintaining good contact with radiused or chamfered components where 1400 types would normally contact only at lug and 'beam'.<br>Load bearing capacity with this type of ring is no better than with standard 1400 types. |

## SECTION 3
### INTERNAL & EXTERNAL CIRCLIPS REQUIRING NO GROOVE

**TYPE** - These circlips are used directly on the shaft or in the bore without a machined groove. They work merely by frictional forces and their performance is influenced by the shaft/bore condition. The best performance can be expected with an unhardened shaft/bore where no lubricant is present.

**NOMINAL SIZE** - The nominal size refers to the shaft/bore on which the clips grip.

e.g. N1465-0025 is used on a 0.250" shaft

| PROFILE | DESCRIPTION |
|---|---|
| 1440 | EXTERNAL 'GRIPRING'<br>Very heavy section depth gives high gripping pressure on the designated shaft or stud. Tapered section design ensures even contact when fitted.<br>Has the advantage over 'push on' types in that 1440 types are easily fitted and removed and cause negligible damage to the shaft. |

| PROFILE | DESCRIPTION | PROFILE | DESCRIPTION |
|---|---|---|---|
| 1305 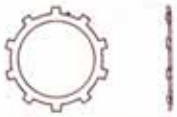 | INTERNAL 'PUSH-ON'<br>Used to retain parts such as dust seal within a bore. Load bearing capacity dependent on bore roughness and hardness. Prongs 'dig in' to bore material and therefore some minor bore damage (scratches) may occur.<br>Difficult to remove. | 1465 | REINFORCED EXTERNAL 'PUSH-ON'<br>Used to retain parts on shafts or studs.<br>The dished form of the outer rim provides extra stiffness. Gives better load capacity than alternative flat versions and is less sensitive to uneven loading.<br>Difficult to remove. |

## SECTION 4
### EXTERNAL CIRCLIPS 1500 'E' TYPE & VARIANTS

**TYPE** - These circlips are radially applied, i.e. are fitted directly onto the groove from the side of the shaft.

**NOMINAL SIZE** - The size designation for these circlips depends upon which national standard is chosen. The British and European standard clips have designations based on groove size.

e.g. D1500-0050 (to DIN 6799) is for a 5 mm groove diameter. Those clips to American standards have designations based on shaft size.

e.g. N1500-0025 is designed to fit a groove cut in a nominal shaft of 0.25".

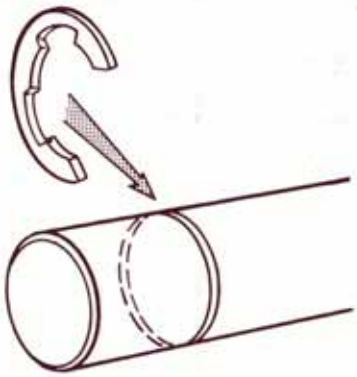

| PROFILE | DESCRIPTION | PROFILE | DESCRIPTION |
|---|---|---|---|
| 1500 | BASIC 'E'-CLIP<br>Provides relatively large shoulder height for a small shaft diameter.<br>Can be supplied in stacked form for use with stackfeeda bases and applicators for rapid assembly.<br>Only groove size is critical with this type of circlip, the shaft diameter can be varied widely. | 1501 | BOWED 'E'-CLIP<br>Provides resilient end play take up.<br>Acts in a similar way to a spring and provides resilient retention. Used to take up tolerances to remove any 'slack' from an assembly.<br>Cannot be stacked. |

| PROFILE | DESCRIPTION | PROFILE | DESCRIPTION |
|---|---|---|---|
| 1540 | REINFORCED 'E'-CLIP<br>Distinguished from a normal 'E' clip by the tapered 'wing' section.<br>The tapered design gives a much improved grip on the groove making it harder to remove and providing a better performance under high rotational speed.<br>Available stacked. | 1500 'S' | INCREASED GROOVE CONTACT<br>A simplified version of 1500 'C' type, designed to give increased groove contact compared with the standard 'E' clip.<br>Limited range. Available stacked. |
| 1500 'U' | INCREASED ABUTMENT<br>Provides a high shoulder whilst the design gives sufficient flexibility to allow easy fitting.<br>Restricted range. Available stacked. | 1800 | CRESCENT RING - LOW CLEARANCE<br>This type of ring is used where a low clearance diameter is required.<br>Shaft tolerances are more critical than with the 1500 type.<br>Available stacked. |
| 1500 'C' | INCREASED GROOVE CONTACT<br>Designed to have more groove contact than the standard 'E' clip.<br>Limited range. Available stacked. | | |

## SECTION 5

### EXTERNAL RINGS PRODUCED FROM PLAIN SECTION WIRE

**TYPE** - External circlips or snap rings produced by coiling or forming an even sectioned wire. Their performance is generally inferior to the tapered section 1400 types due to the uneven stresses within the rings. When fitted, snap rings cannot contact the groove fully because of these uneven stresses.

**NOMINAL SIZE** - Most of these ring types take their size designation from the shaft size.
e.g. M2400-0300 is for a 30 mm shaft.

| PROFILE | DESCRIPTION | PROFILE | DESCRIPTION |
|---|---|---|---|
| 0500 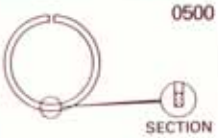  | AXIALLY APPLIED IMPERIAL SIZES<br>Rectangular section, axially applied ring which may possibly be used where space is limited and the lugs of a 1400 type would not be acceptable.<br>Difficult to remove. Limited range. | 1100 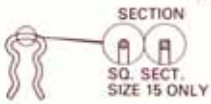  | RADIALLY APPLIED INCREASED ABUTMENT<br>Radially applied clip which provides high shoulder. Designed to tolerate wide groove diameter variation.<br>Easily fitted and removed (applicators available). |
| 0600 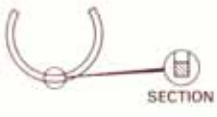  | RADIALLY APPLIED<br>Square section ring which is radially applied.<br>Low clearance.<br>Limited range. | 1200 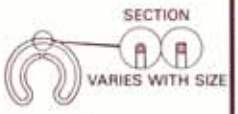  | RADIALLY APPLIED INCREASED ABUTMENT<br>Similar in performance to 1100 types but more peripheral abutment.<br>Easily fitted and removed (applicators available). |
| 0700 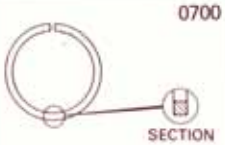  | AXIALLY APPLIED IMPERIAL SIZES<br>Square section axially applied ring.<br>Low clearance.<br>Difficult to remove.<br>Limited range. | 2400 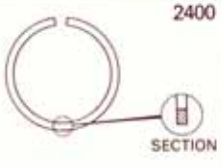  | AXIALLY APPLIED METRIC RANGE LOW CLEARANCE<br>Designed specifically to give low clearance for use with needle roller bearings.<br>Difficult to remove. Large range. |
| 0900/1000 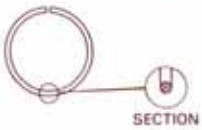  | AXIALLY APPLIED<br>Round section, axially applied ring.<br>The main distinction between 0900 & 1000 type is that the 1000 type is supplied as standard in a galvanised wire as compared with the normal finish of oil dipped.<br>Difficult to remove. Limited range. | 3200 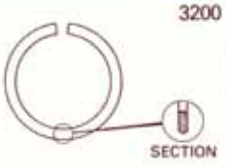  | AXIALLY APPLIED METRIC RANGE<br>Designed specifically for use with roller bearings.<br>Radiused edged material section permits assembly into badly cut bearing grooves.<br>Large range. |

# CIRCLIP TYPES

## SECTION 6
## INTERNAL RINGS PRODUCED FROM PLAIN SECTION WIRE

**TYPE** - Internal circlips or snap rings produced by coiling or forming an even sectioned wire. Due to uneven stresses associated with snap rings, their performance is generally inferior to the tapered section 1300 types.

**NOMINAL SIZE** - The nominal size of all the types shown below is taken from the bore size through which the ring is designed to pass.

| PROFILE | DESCRIPTION | PROFILE | DESCRIPTION |
|---|---|---|---|
| 1700 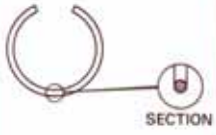  | ROUND SECTION<br>METRIC RANGE<br>Round section internal ring. This ring form is used widely for gudgeon pin retention.<br>Difficult to fit and almost impossible to remove.<br>Limited range. | 2500 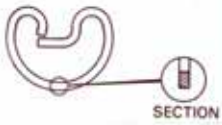  | BAR-RINGS<br>NON-TANGLE<br>EASY APPLICATION<br>Originally designed for use on universal joint type couplings.<br>Form does not allow any internal clearance.<br>Easily fitted and removed using an ordinary pair of snipe nosed pliers.<br>Limited range. |
| 2300 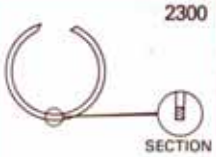  | RECTANGULAR SECTION<br>METRIC RANGE<br>LOW SHOULDER<br>Designed specifically to give low shoulder for use with needle roller bearings.<br>Difficult to fit and remove.<br>Large range. | | |

# STANDARD MATERIALS

## STANDARD MATERIALS

The standard material for most circlips and retaining rings is carbon spring steel (CS). All circlips made from this material are austempered so as to give optimum ductility at the high hardness values necessary for correct function. The standard hardness ranges for all available types of circlip are shown opposite.

Plain rings are normally manufactured from hard drawn wire and as such do not necessarily give consistent hardness readings. If hardness values are required they may be obtained by taking equivalents to the tensile ranges quoted in BS 5216-NS. Rings in this category are A0500, A0600, A0700, A0900, A1000, M1700, M2300, M2400, M3200.

| Type | Size Range | | Hardness HRC Equivalent |
|---|---|---|---|
| | Metric | Imperial | |
| 1300 and variants<br>1400 and variants<br>D2000<br>D2100 | Up to and including 15 mm | Up to and including – 50 | 51 - 55 |
| | 16 - 34 mm | Above – 51 to – 150 | 48 - 53 |
| | 35 - 200 mm | – 156 and above | 47 - 51 |
| | Above 200 mm | | 43 - 47 |
| A1100<br>A1200<br>1500 and Variants<br>N1800<br>M1800 | ALL | ALL | 49 - 53 |
| M2500 | ALL | ALL | 54 - 59 |

N.B. Electroplated circlips may be reduced in hardness to increase their ductility.

| Circlip Material | Mat'l Code | Order Code | Specifications | Special Composition Restrictions | Maximum Operating Temperature Short Term | Long Term | Min Oper. Temp. | General Corrosion Resistance | Circlip Types Available (Incl. Variants) |
|---|---|---|---|---|---|---|---|---|---|
| Cold rolled carbon spring steel strip | CS | A | BS 1449 CS80 | Carbon 0.75-0.85%<br>Manganese 0.65-0.85%<br>Sulphur 0.030% max.<br>Phosphorus 0.030% max. | 300°C | 200°C | −20°C | Phosphated - Moderate<br>Oiled - Poor | 1300, 1400, 1500, 1800, 2000, 2100, 2300, 2400. |
| Carbon steel wire | CS | A | BS 1429 and BS 970 070A78 | Manganese 0.65-0.85% | 300°C | 200°C | −20°C | Phosphated - Moderate<br>Oiled - Poor | 1300, 1400, 2000, 2100, 2500, 1100, 1200. |
| Hard drawn carbon steel wire | CS | A | BS 5216 | – | 200°C | 150°C | −20°C | Phosphated - Moderate<br>Oiled - Poor | 500, 600, 700, 900, 1000, 1700, 2300, 2400, 3200 |
| Phosphor-bronze cold rolled strip | PB | E | BS 2870 - PB 103 | – | 250°C | 150°C | −100°C | Good | 1300, 1400, 1500, 1800. |
| Phosphor-bronze hard drawn wire | PB | E | BS 2873 - PB 103 | – | 250°C | 150°C | −100°C | Good | 500, 600, 700. |
| Beryllium-copper. Cold rolled strip | BC | F | BS2870 - CB 101 | – | 250°C | 150°C | −100°C | Good | 1300, 1400, 1500, 1800. |
| Cold rolled stainless steel strip | AS | B | AMS 5520<br>PH 15-7 Mo | – | 450°C | 350°C | −100°C | Good | 1300, 1400, 1500, 1800. |
| Cold rolled stainless steel strip (420 Type) | RS | C | DIN 1.4034<br>DIN 1.4122<br>BSC SF14 | – | 300°C | 200°C | −20°C | Fair | 1300, 1400, 1500, 1800. |
| Hard drawn stainless steel wire (302 Type) | SS | D | BS 2056 - 302S25 | – | 250°C | 150°C | −100°C | Good | 900, 1000, 1700. |

## SPECIAL MATERIALS

The standard material for all circlips, with the exception of some small external types **(see individual tables)** which are made from beryllium copper, is carbon spring steel. Other materials are available on request and typical properties and availability are shown above.

It should be noted that parts made from special materials can not be guaranteed to meet the thickness specifications for standard parts, due to the wider tolerance bands available on raw materials. The nominal thicknesses are maintained but allowance should be made for additional thickness tolerances.

## GALVANIC CORROSION -COMPATABILITY OF MATERIALS

Care should be exercised when specifying special materials that no galvanic interaction between the circlip and the groove material will be likely to occur. This is usually only a problem when the assembly is in contact with conductive solutions but for guidance a table of relative galvanic corrosion properties is shown right.

* Severe galvanic corrosion
**** Minimal galvanic corrosion
(C) Circlip tends to corrode
(G) Groove materials tends to corrode

| CIRCLIP Material or Finish | Groove Material or finish | | | | | | |
|---|---|---|---|---|---|---|---|
| | Carbon steel | Copper alloys | Magnesium Aluminium | Cadmium Zinc | Chromium | Nickel | Stainless steel |
| Carbon steel | **** | *(C) | *(G) | **(G) | ***(G) | ***(C) | **** |
| Stainless steel | **** | ***(C) | **** | **** | **** | **** | **** |
| Beryllium copper/ Phosphor Bronze | *(G) | **** | *(G) | *(G) | **(G) | ***(G) | ***(G) |
| Zinc Plate | **(C) | *(C) | ***(G) | *** | ***(C) | **(C) | ***(C) |
| Cadmium Plate | ***(C) | *(C) | ***(G) | **** | ***(C) | ***(C) | ***(C) |
| Nickel Plate | ***(G) | ***(G) | **(G) | ***(G) | ***(G) | **** | **** |
| Tin Plate | **(G) | ***(C) | *(G) | *(G) | **(G) | ***(G) | ***(G) |

## SPECIFIC CORROSION ENVIRONMENTS

For assistance in the selection of special materials for use in specific environments a list of corrosive media and suitable circlip materials is shown opposite. It should be noted that no recommendations for circlip materials can be made where contact with mineral acids, acidic gases of sulphur and nitrogen and the halogens is anticipated.

| Corrosive agent | Circlip material for: Satisfactory resistance | Limited application |
|---|---|---|
| Industrial or urban atmosphere | SS AS BC PB RS | CS |
| Rural atmosphere | SS AS RS | CS |
| Marine atmosphere | BC PB SS AS | RS CS |
| Sea water and salt solutions | PB BC AS SS | CS RS |
| Foodstuffs, fruit etc. | SS AS | RS |
| Petroleum oils (crude) | RS SS AS | PB BC |
| Organic solvents | SS | RS AS |
| Steam 250°C<br>500°C | PB SS AS RS<br>SS | CS<br>RS |
| Tap water | SS AS PB | CS RS |

## PLATED & OTHER FINISHES

Phosphate and oil is the standard finish on most of the parts in our catalogue, the remainder being self finish and oil. Where improved properties are required, plated circlips provide additional protection when operating in corrosive environments and they may also be used where colour or appearance is important. It is essential to select the finish required with a view to the operating conditions, since some combinations may actually accelerate corrosion.

These tables will give some assistance in the selection of finish.

| Finish | Code | Type | Thickness of Finish (μ) |
|---|---|---|---|
| Zinc Plate* | ZP | Electroplated zinc | 6 min. |
| | ZE | Mechanically plated zinc | 6 min. |
| Zinc Plate and Yellow Passivate | ZD | Electroplated zinc with dichromate passivation | 6 min. |
| | ZZ | Electroplated zinc with dichromate passivation | 12 min. |
| | ZX | Mechanically plated zinc with dichromate passivation | 12 min. |

All ranges between 500 & 1200 except 1000 series will be supplied either in self finish or zinc plated (electro or mechanical at our discretion). *ZE finish may be substituted for ZP at our discretion

| Finish | Code | Type | Thickness of Finish (μ) |
|---|---|---|---|
| Cadmium Plate | CP | Electroplated cadmium | 6 min. |
| Cadmium Plate and Yellow Passivate | CD | Electroplated cadmium with dichromate passivation | 6 min. |
| | CZ | Electroplated cadmium with dichromate passivation | 12 min. |

Please note where ZP & CP finished are specified the plating is clear passivated to improve corrosion resistance

Electroplating gives a generally brighter appearance than that found on mechanically plated parts which, because of the method of applying the coating by peening, have a matt finish. Mechanically plated parts are, however, totally free from hydrogen embrittlement.

## CADMIUM

Because of the introduction of international legislation to exclude the use of cadmium, this plated finish is not offered except at customer's specific request and where quantities are sufficiently large.

## OTHER FINISHES

Coloured lacquer finishes, for identification purposes, are available subject to enquiry as are copper flashed.

## NOTE

With all plated finishes there is an increase in the overall part thickness. Allowance should be made for this by increasing the specifications for circlip thickness and groove width by 0.05 mm (0.002 in.).

## HEAT TREATMENT

Since Anderton pioneered the use of isothermal transformation (austempering) for circlips in the 1950's it has become the preferred form of heat treatment and is now specified in the National Standards of all major industrial countries. It benefits the user by providing parts which have significant improvements in proof stress, ultimate tensile strength, ductility and toughness when compared with oil hardened parts.

The principles of austempering are illustrated in the diagram, which shows the controlled cooling and isothermal transformation necessary to achieve a fully austempered microstructure (bainite). Also shown is the thermal treatment which produces a quenched and tempered structure (martensite).

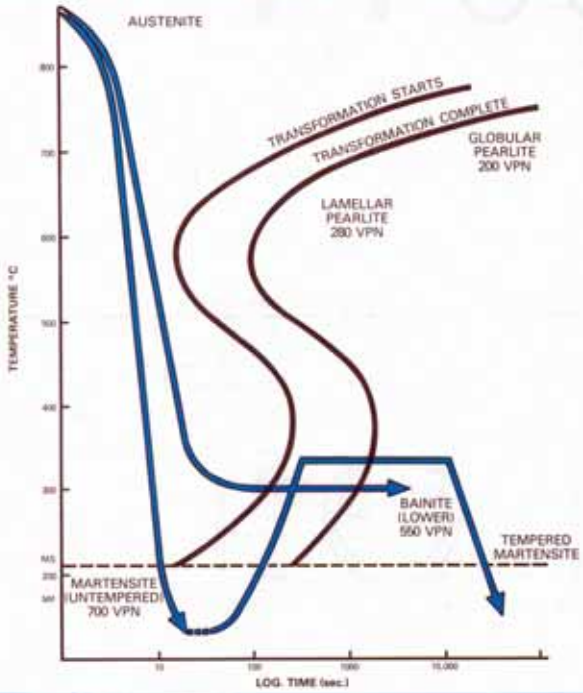


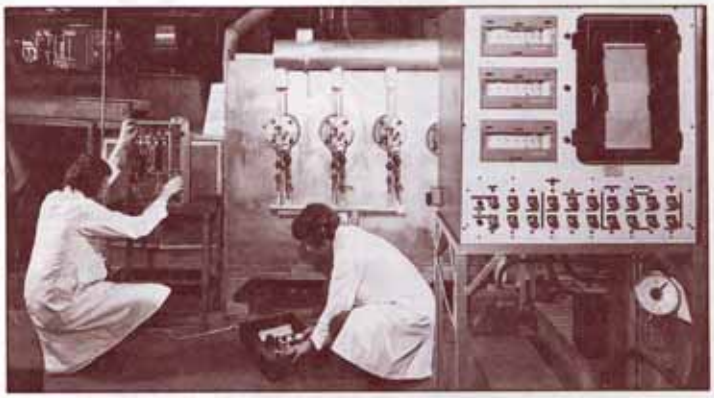

Austempering furnace is regularly checked by laboratory personnel to ensure correct temperature and protective gas atmosphere.

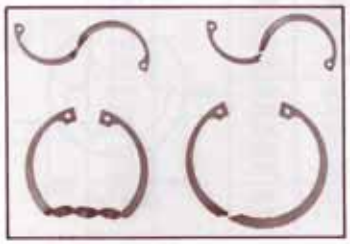

A simple test illustrating the effectiveness of austempering as compared with oil hardening for improving ductility.

## QUALITY CONTROL

Our aim is to provide the highest quality of circlips available at a price which is competitive. To this end all circlips and retaining rings manufactured by Anderton are produced under the same Inspection system and Laboratory controls as approved by the Ministry of Defence and Civil Aviation Authority.

Our batch number system provides for full traceability of all characteristics of our circlips - the actual batch number being displayed on each pack of circlips. Where additional information, or certification is required, customers may request one of the several additional Inspection schemes offered.

Approved to M.O.D. (P.E.) 05-24 Reg. No. 198AO1
and CAA ref. AI/4462/54

## VENDOR ASSURANCE/ CERTIFICATE OF CONFORMANCE

This scheme incorporates a sample check of critical dimensions of each delivery of parts in accordance with BS6001, or any scheme of the customers' choice, and certification to confirm the conformance of the parts.

## CUSTOMERS STANDARD TESTS & CHECKS

### Circlip Type & Size Identification

Customers often experience difficulties in identifying wire rings and radially applied circlips due to the similarity between the designs of the various standard types. Given opposite is a guide to assist in identification.

### Plain Wire Rings

First determine the nature of the material section, then use the chart right, to identify the ring type. Sizes can then be derived from the information given in the data sheets for the particular type.

### Radially Applied Circlips

To identify 1500 and 1800 types, the thickness and outside diameter must be measured accurately. These values should then be compared with the data in the relevant tables to determine the specific type, i.e. B1500, D1500, N1500 etc. and the size. It should be noted that most of the B1500 range differ only from the N1500 clips by their thickness.

## 100% FUNCTIONAL TESTING

For certain applications, particularly in the automotive field, customers avail themselves of our functional testing facilities. This service, which is available on selected sizes of internal circlips, involves the physical closure of every part so as to simulate the fitting of the circlip and the subsequent gauging of the part to ensure that proper location in the groove will occur.

## M.O.D./C.A.A.

Anderton hold approvals to MOD (PE)05-24/2 conditions and to C.A.A. requirements and full release certification for both organisations is available on request.

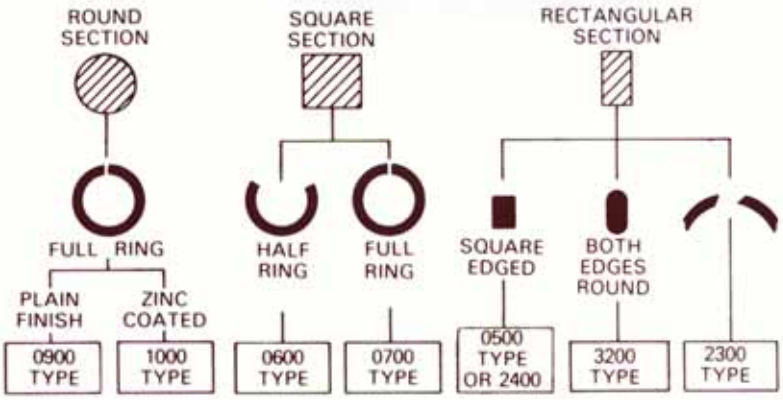


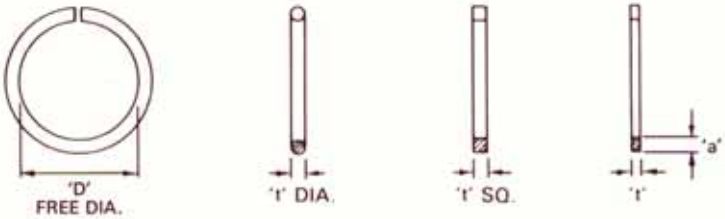


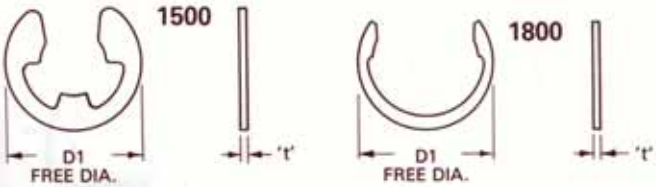

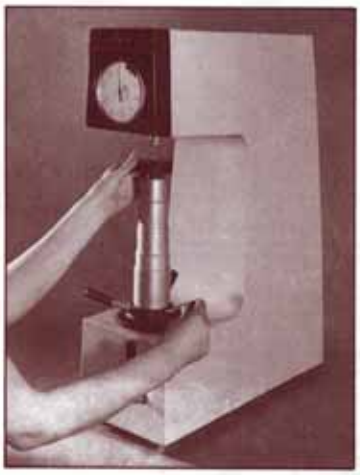

Setting up for Rockwell hardness testing on an Avery-Denison machine

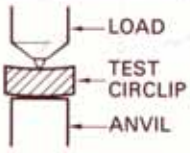


## HARDNESS TESTING

To obtain accurate hardness readings there are 3 essentials, firstly ensure that the part to be tested does not flex when the indentor load is applied, secondly remove any surface coating from **both** sides of the test piece and finally make sure that the correct testing load is used.

We recommend that, when hardness testing circlips, both sides of the clip be thoroughly cleaned by polishing or, in the case of plating, pickling. In addition the slightly convex face of the circlip should be presented to the anvil (see diagram) and the recommended load and hardness scale be chosen from the table below.

All hardness values are quoted as HRC equivalents i.e. where lighter loads are used the results should be converted to the HRC scale.

| Rockwell | | | Vickers | |
|---|---|---|---|---|
| Scale | Load kg. | Minimum Test piece Thickness | Load kg. | Minimum Test piece Thickness |
| 15N | 15 | 0.50 | 5 | 0.25 |
| 30N | 30 | 0.80 | 10 | 0.35 |
| 45N | 45 | 1.00 | 20 | 0.45 |
| A | 60 | 1.25 | 30 | 0.55 |
| B | 100 | 1.50 | 50 | 0.75 |
| C | 150 | 1.50 | 100 | 1.00 |

## THRUST LOAD CALCULATIONS

### Important

The thrust load figures listed in the catalogue tables should be used as guidelines and should be applied only when the following conditions are true:-

1. Circlips are loaded in pure shear, i.e. abutting part is sharp cornered and is a slide fit on the shaft or in the bore.
2. Circlips are in standard material (as listed page 5)
3. Groove material is of 300 N/mm$^2$ (45000 psi) yield strength.
4. Steady loading conditions.

| Circlip Type | Safety Factor | | Conversion Factor Cf. |
|---|---|---|---|
| | Clip | Groove | |
| 0500 | 4 | 2.5 | 1.0 |
| 0600 | 4 | 2.5 | 0.75 |
| 0700 | 4 | 2.5 | 1.0 |
| 0900 | 12 | 2.5 | 1.0 |
| 1000 | 12 | 2.5 | 1.0 |
| 1100 | 4 | 2.5 | 0.75 |
| 1200 | 4 | 2.5 | 0.75 |
| 1300 | 4 | 2.5 | 1.0 |
| 1302 | 4 | 2.5 | 1.0 |
| 1308 | 4 | 2.5 | 0.5 |
| 1400 | 4 | 2.5 | 1.0 |
| 1408 | 4 | 2.5 | 0.5 |
| 1460 | 4 | 2.5 | 1.0 |
| 1500 | 3 | 2.5 | 0.33 |
| 1500 U,C,S | 3 | 2.5 | 0.6 |
| 1501 | 3 | 2.5 | 0.33 |
| 1540 | 3 | 2.5 | 0.33 |
| 1700 | 4 | 2.5 | 0.8 |
| 1800 | 4 | 2.5 | 0.5 |
| 2000 | 4 | 2.5 | 1.0 |
| 2100 | 4 | 2.5 | 1.0 |
| 2300 | 4 | 2.5 | 1.0 |
| 2400 | 4 | 2.5 | 1.0 |
| 2500 | 4 | 2.5 | 0.8 |
| 3200 | 4 | 2.5 | 1.0 |

**Standard Formulae** - Static Loads, Sharp Edged Abutment.
The maximum safe load for a circlip assembly may be calculated using the formulae shown below. Conversion factors have been incorporated to take account of groove imperfections, slack fits etc.

Where hardened groove materials are used, the circlip is usually the weaker component and, conversely, where soft groove materials are employed, the strength of the groove will be the limiting factor.

### External Clips

$$\text{Clip thrust load } Tc = \frac{S.t.\pi.\mu.Cf.}{Sf\ CLIP}$$

$$\text{Groove thrust load } Tg = \frac{S(S-G).Y.\pi.Cf.}{2 \times Sf\ Groove}$$

### Internal Clips

$$\text{Clip thrust load } Tc = \frac{B.t.\pi.\mu.Cf.}{Sf\ CLIP}$$

$$\text{Groove thrust load } Tg = \frac{B(G-B).Y.\pi.Cf.}{2 \times Sf\ Groove}$$

**Where:**

S = Shaft diameter
B = Bore diameter
G = Groove diameter
t = Circlip thickness
Y = Yield strength of groove material
Cf = Conversion factor
Sf = Safety factor
$\mu$ = Ultimate shear strength of circlip material

**Special Materials**
If circlips or grooves are produced in materials other than those shown in the catalogue, then thrust load figures must be adjusted accordingly.

**Circlip**
Conversion factors are listed in adjacent table for special circlip materials. Multiply catalogue figure by conversion factor to obtain modified thrust capacity:
$Tc' = Tc \times Cfc$

| Material | Code | Conversion Factor-Circlip Cfc |
|---|---|---|
| Stainless Steel | RS | 0.95 |
| | AS | 0.95 |
| | SS | 0.85 |
| Beryllium Copper | BC | 0.6 |
| Phosphor Bronze | PB | 0.4 |

**Groove**
Groove materials may, in practice, vary considerably from our accepted norm of 'MILD STEEL'. The adjacent table shows typical figures for other common materials.

Multiply catalogue figure by conversion factor to obtain modified groove thrust capacity:
$Tg' = Tg \times Cfg$.

For intermediate materials, groove capacity may be obtained by ratio method.

i.e. $Tc' = \frac{Tc \times Y' \text{ (Actual)}}{Y \text{ (Catalogue)}}$

| Groove Material | Ultimate Tensile Strength Kg/mm² | Yield Strength (Y) | | | Approx. Hardness BHN | Conversion Factor - Groove Cfg |
|---|---|---|---|---|---|---|
| | | lb/in² | Kg/mm² | N/mm² | | |
| Hardened Steel | 125 | 145,000 | 100 | 980 | 360 | 3.25 |
| Mild Steel | 47 | 45,000 | 31.5 | 300 | 125 | 1.0 |
| Cast Iron | 32 | 32,000 | 22.5 | 220 | 85 | 0.73 |
| Brass (Cold rolled) | 47 | 60,000 | 43.0 | 420 | 125 | 1.4 |
| Brass (Soft) | 35 | 18,500 | 13.0 | 130 | 110 | 0.43 |
| Zinc Alloy | 30 | 21,500 | 15.0 | 147 | 80 | 0.47 |
| Aluminium | 20 | 18,000 | 12.7 | 125 | 65 | 0.42 |

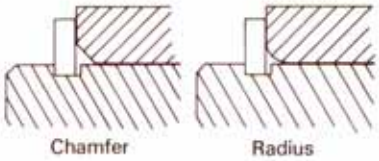


**Radiused, Chamfered Abutment**
Where possible, radiused or chamfered abutment should be avoided, since the load bearing capacity of the circlip will be significantly reduced.

If chamfered or radiused parts must be used then the allowable thrust load will be reduced in proportion to the chamfer depth or radius.

The thrust load for a given corner break may be calculated as follows:

$$Tc' = \frac{X.\pi.\ E.t^3.\ln\left(1 + \frac{2b}{G}\right)}{6.L^2}$$

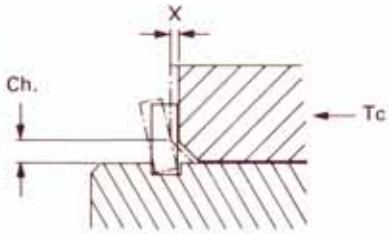


Where: X = Acceptable component deflection
L = Ch + 0.05 mm or 0.75R + 0.05 mm
ln = Natural log.
Elastic Modulus: E = 204100 N/mm² for Carbon Spring Steel

For nomenclature of other symbols see page 15.

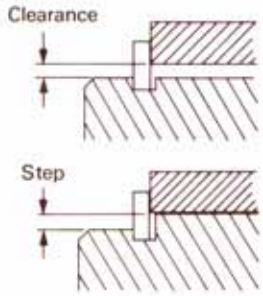


Note that where there is a large clearance between shaft/bore and retained part or a step in the shaft/bore, then these situations should be treated in the same way as with chamfered abutment.

**Impact Loading**
The max. acceptable impact load for a circlip assembly may be determined by the use of the following formulae:-

**Circlip**

$Tci = \frac{Tc.t}{2}$ N.m. (ft. lb)

**Groove**

$Tgi = \frac{Tg.d}{2}$ N.m. (ft. lb)

Tc = Catalogue thrust load circlip N (lb)
Tg = Catalogue thrust load groove N (lb)
t = Circlip thickness converted to metres (feet)
d = Groove depth converted to metres (feet)

| Fastener Type | Bulk Packed Sizes | Roll Packed Sizes | Shrink Wrapped Sizes | Strip Stacked Sizes | Rod Stacked Sizes Fixed | Rod Stacked Sizes Double |
|---|---|---|---|---|---|---|
| A0500 | ALL | | | | | |
| A0600 | ALL | | | | | |
| A0700 | ALL | | | | | |
| A0900 | ALL | | | | | |
| A1000 | ALL | | | | | |
| A1100 | ALL | | | | 21 | |
| A1200 | ALL | | | | | |
| *** D1300 | 8-37 | 65-400 | 15-64, 72, 75 & 80* | * | | |
| N1300 | 25-200 | 206-950 | 75-300 | | | |
| N1302 | 156-200 | 206-550** | 156-300** | | | |
| N1305 | ALL | | | | | |
| M1308 | 16-38 | 40-100 | * | | | |
| N1308 | 62-200 | 206-400 | | | | |
| D1400 | 3-49 | 50-400 | | | | |
| N1400 | 12-196 | 200-1000 | | | | |
| N1401 | ALL | | | | | |
| M1408 | 12-48 | 50-100 | | | | |
| N1408 | 50-196 | 200-400 | | | | |
| M1440 | ALL | | | | | |
| N1440 | ALL | | | | | |
| D1460 | 12-48 | 50-100 | | | | |
| N1460 | ALL | | | | | |
| M1465 | ALL | | | | | |
| N1465 | ALL | | | | | |
| ✢ D1500 | ALL | | | | 7-19 | 1.2-6 |
| ✢ B1500 | ALL | | | | 188-1079 | 52-147 |
| ✢ N1500 | ALL | | | | X21-X118 | 6-18 |
| N1501 | ALL | | | | | |
| ✢ N1540 | ALL | | | | 21-56 | 9-18 |
| M1700 | ALL | | | | | |
| ✢ N1800 | ALL | | | | 62-100 | 12-56 |
| M1800 | ALL | | | | 3-26 ✢ | |
| D2000 | 16-38 | 40-110 | * | * | | |
| D2100 | 16-48 | 50-110 | | | | |
| M2300 | 7-215 | 220-440 | | | | |
| M2400 | 4-215 | 220-400 | | | | |
| M2500 | ALL | | | ALL | | |
| M3200 | 30-215 | 220-240 | | | | |

**STANDARD PACKING AVAILABLE**

*Some/further sizes may be available on request.

**Stacked with bevels randomly orientated.

*** Sizes 40-64 normally supplied 100% functionally tested.

✢ May be taped.

# PART DESIGNATION WHEN ORDERING

The full part designation consists of 14 digits - as found on our advice notes etc. For the purposes of ordering, however we recommend the use of an abbreviated code of 9 digits - with supplementary Finish & Packing codes, where necessary.

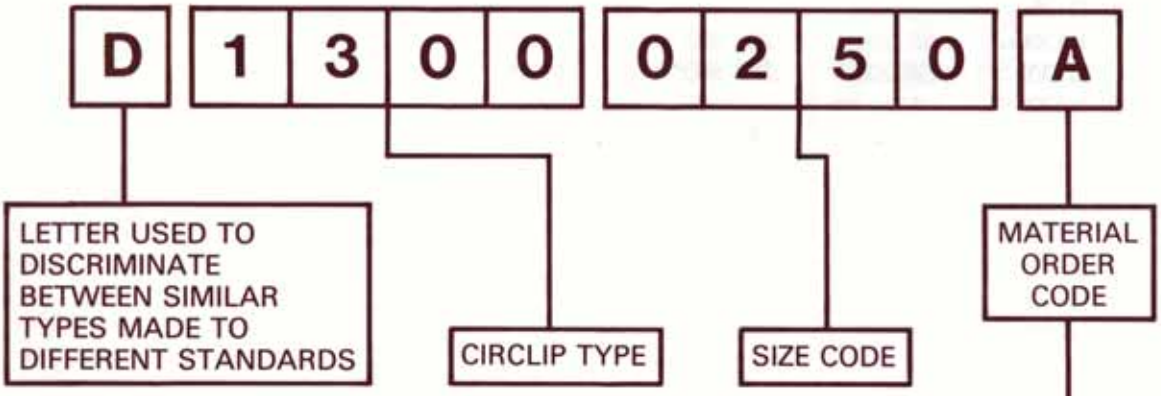


| | | |
|---|---|---|
| A | Carbon Spring Steel | CS |
| B | PH 15-7 MO Stainless Steel | AS |
| C | 420 Type Stainless Steel | RS |
| D | 302 Type Stainless Steel | SS |
| E | Phosphor Bronze | PB |
| F | Beryllium Copper | BC |

The information necessary for ordering is given on each page of the catalogue data sheets.

In the example given above the circlip represented is:

i) A metric circlip conforming to DIN & BSI standards .....(D)
ii) A standard internal type .....(1300)
iii) Suitable for a 25 mm bore .....(0250)
iv) Material – Carbon spring steel (CS) .....(A)

Standard materials and finishes are shown on each data sheet. If non-standard variants are required, this information should be noted after the part number.

e.g. N1500 0050 B STKD for clips required in stainless steel (type AS) – stacked

For special materials see page 6
For finishes see page 7
For packing methods see page 11

N.B. Since many non-standards can only be made to order, customers should enquire as to availability before ordering.

Where plating, or non-standard materials are required, allowances must be made on groove widths. It is recommended that an additional tolerance of 0.05 mm (.002") be allowed on both the groove width and the circlip thickness.

All dimensions in mm

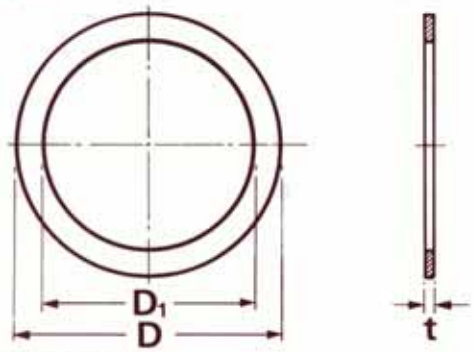


When ordering Shims or Support Washers quote series P or R, inside diameter, outside diameter and thickness example:-
P.100/120/0.30

| P | 100 | 120 | 0.30 |
|---|---|---|---|
| SERIES | INSIDE DIA. | OUTSIDE DIA. | THICKNESS |

Hardness: P Series 170-225 HV
R Series 44-49 HRC

† Apply ISO Tolerance D12
÷ Apply ISO Tolerance d12

| † | ÷ | Shims (Series P) t/Tol | | | | | | | | | | Support washers (Series R) | | |
|---|---|---|---|---|---|---|---|---|---|---|---|---|---|---|
| D1 | D | 0,1 / −0,03 | 0,15 / −0,04 | 0,2 / −0,04 | 0,25 / −0,04 | 0,3 / −0,05 | 0,5 / −0,05 | 1,0 / −0,05 | 1,2 / −0,07 | 1,5 / −0,07 | 2,0 / −0,07 | t | Tol | Wt kg/k |
| | | Wt (kg/k) | | | | | | | | | | | | |
| 3 | 6 | 0,016 | 0,024 | 0,032 | 0,040 | 0,050 | 0,083 | 0,165 | – | – | – | 1,0 | −0,05 | 0,165 |
| 4 | 8 | 0,030 | 0,045 | 0,060 | 0,075 | 0,089 | 0,148 | 0,296 | – | – | – | 1,0 | −0,05 | 0,296 |
| 5 | 10 | 0,046 | 0,069 | 0,092 | 0,115 | 0,139 | 0,231 | 0,462 | – | – | – | 1,0 | −0,05 | 0,462 |
| 6 | 12 | 0,067 | 0,101 | 0,134 | 0,168 | 0,200 | 0,333 | 0,666 | – | – | – | 1,2 | −0,05 | 0,800 |
| 7 | 13 | 0,074 | 0,111 | 0,148 | 0,185 | 0,221 | 0,369 | 0,738 | – | – | – | 1,2 | −0,05 | 0,885 |
| 8 | 14 | 0,082 | 0,123 | 0,164 | 0,205 | 0,245 | 0,408 | 0,815 | – | – | – | 1,2 | −0,05 | 0,980 |
| 9 | 15 | 0,089 | 0,134 | 0,178 | 0,223 | 0,270 | 0,445 | 0,891 | – | – | – | 1,2 | −0,05 | 1,070 |
| 10 | 16 | 0,096 | 0,144 | 0,192 | 0,240 | 0,290 | 0,481 | 0,963 | – | – | – | 1,2 | −0,05 | 1,150 |
| 11 | 17 | 0,103 | 0,155 | 0,206 | 0,258 | 0,310 | 0,515 | 1,03 | – | – | – | 1,2 | −0,05 | 1,233 |
| 12 | 18 | 0,111 | 0,167 | 0,222 | 0,278 | 0,332 | 0,555 | 1,11 | – | – | – | 1,2 | −0,05 | 1,330 |
| 13 | 19 | 0,119 | 0,179 | 0,237 | 0,296 | 0,357 | 0,595 | 1.19 | 1,428 | – | – | 1,5 | −0,05 | 1,78 |
| 14 | 20 | 0,126 | 0,189 | 0,252 | 0,315 | 0,378 | 0,630 | 1,26 | 1,512 | – | – | 1,5 | −0,05 | 1,89 |
| 15 | 21 | 0,133 | 0,199 | 0,266 | 0,333 | 0,399 | 0,665 | 1,33 | 1,596 | – | – | 1,5 | −0,05 | 2,00 |
| 15 | 22 | 0,137 | 0,205 | 0,274 | 0,342 | 0,410 | 0,683 | 1,36 | 1,636 | – | – | 1,5 | −0,05 | 2,05 |
| 16 | 22 | 0,140 | 0,210 | 0,280 | 0,350 | 0,420 | 0,700 | 1,40 | 1,680 | – | – | 1,5 | −0,05 | 2,10 |
| 17 | 24 | 0,177 | 0,266 | 0,354 | 0,443 | 0,530 | 0,885 | 1,77 | 2,124 | – | – | 1,5 | −0,05 | 2,65 |
| 18 | 25 | 0,185 | 0,278 | 0,370 | 0,463 | 0,551 | 0,925 | 1,85 | 2,220 | – | – | 1,5 | −0,05 | 2,78 |
| 19 | 26 | 0,194 | 0,291 | 0,388 | 0,485 | 0,584 | 0,97 | 1.94 | 2,328 | – | – | 1,5 | −0,05 | 2,91 |
| 20 | 28 | 0,236 | 0,354 | 0,472 | 0,590 | 0,71 | 1,18 | 2,36 | 2,832 | 3,540 | – | 2,0 | −0,05 | 4,72 |
| 22 | 30 | 0,257 | 0,386 | 0,514 | 0,643 | 0,77 | 1.28 | 2,57 | 3,084 | 3,855 | – | 2,0 | −0,05 | 5,14 |
| 22 | 32 | 0,333 | 0,500 | 0,666 | 0,833 | 1,00 | 1,66 | 3,33 | 3,996 | 4,995 | – | 2,0 | −0,05 | 6,66 |
| 25 | 35 | 0,370 | 0,555 | 0,740 | 0,925 | 1,11 | 1,85 | 3,70 | 4,440 | 5,55 | – | 2,0 | −0,05 | 7,40 |
| 25 | 36 | 0,414 | 0,621 | 0,828 | 1,035 | 1,24 | 2,07 | 4,14 | 4,968 | 6,21 | – | 2,0 | −0,05 | 8,28 |
| 26 | 37 | 0,427 | 0,641 | 0,854 | 1,068 | 1,28 | 2,13 | 4,27 | 5,124 | 6,40 | – | 2,0 | −0,05 | 8,54 |
| 28 | 40 | 0,503 | 0,755 | 1,006 | 1,258 | 1,51 | 2,51 | 5,03 | 6,036 | 7,54 | – | 2,0 | −0,05 | 10,06 |
| 30 | 42 | 0,535 | 0,803 | 1,070 | 1,338 | 1,60 | 2,68 | 5,35 | 6,42 | 8,03 | 10,7 | 2,5 | −0,05 | 13,40 |
| 32 | 45 | 0,619 | 0,929 | 1,238 | 1,548 | 1,86 | 3,10 | 6,19 | 7,43 | 9,29 | 12,4 | 2,5 | −0,05 | 15,5 |
| 35 | 45 | 0,495 | 0,743 | 0,990 | 1,238 | 1,49 | 2,48 | 4,95 | 5,94 | 7,43 | 9,9 | 2,5 | −0,05 | 12,3 |
| 36 | 45 | 0,451 | 0,677 | 0,902 | 1,128 | 1,35 | 2,25 | 4,51 | 5,41 | 6,76 | 9,0 | 2,5 | −0,05 | 11,3 |
| 37 | 47 | 0,516 | 0,774 | 1,032 | 1,290 | 1,55 | 2,58 | 5,16 | 6,19 | 7,74 | 10,3 | 2,5 | −0,05 | 12,9 |
| 40 | 50 | 0,554 | 0,831 | 1,108 | 1,385 | 1,69 | 2,77 | 5,54 | 6,65 | 8,31 | 11,1 | 2,5 | −0,05 | 13,9 |
| 42 | 52 | 0,58 | 0,87 | 1,06 | 1,35 | 1,73 | 2,90 | 5,78 | 6,93 | 8,68 | 11,5 | 2,5 | −0,05 | 14,5 |
| 45 | 55 | 0,62 | 0,93 | 1,22 | 1,53 | 1,85 | 3,10 | 6,2 | 7,44 | 9,30 | 12,4 | 3,0 | −0,06 | 18,6 |
| 45 | 56 | 0,68 | 1,02 | 1,36 | 1,70 | 2,04 | 3,40 | 6,8 | 8,16 | 10,20 | 13,6 | 3,0 | −0,06 | 20,4 |
| 48 | 60 | 0,79 | 1,18 | 1,58 | 1,97 | 2,37 | 3,95 | 7,9 | 9,48 | 11,80 | 15,8 | 3,0 | −0,06 | 23,7 |
| 50 | 62 | 0,83 | 1,24 | 1,66 | 2,07 | 2,49 | 4,15 | 8,3 | 9,96 | 12,40 | 16,6 | 3,0 | −0,06 | 24,9 |
| 50 | 63 | 0,91 | 1,36 | 1,82 | 2,27 | 2,73 | 4,55 | 9,1 | 10,9 | 13,6 | 18,2 | 3,0 | −0,06 | 27,3 |
| 52 | 65 | 0,94 | 1,41 | 1,88 | 2,35 | 2,82 | 4,70 | 9,4 | 11,3 | 14,1 | 18,8 | 3,0 | −0,06 | 28,2 |
| 55 | 68 | 0,98 | 1,47 | 1,96 | 2,45 | 2,93 | 4,90 | 9,8 | 11,7 | 14,7 | 19,6 | 3,0 | −0,06 | 29,3 |
| 56 | 70 | 1,09 | 1,64 | 2,18 | 2,73 | 3,27 | 5,45 | 10.9 | 13,1 | 16,4 | 21,8 | 3,0 | −0,06 | 32,7 |
| 56 | 72 | 1,27 | 1,90 | 2,54 | 3,17 | 3,80 | 6,35 | 12,7 | 15,2 | 19,0 | 25,4 | 3,0 | −0,06 | 38,0 |
| 60 | 75 | 1,25 | 1,87 | 2,50 | 3,12 | 3,75 | 6,25 | 12,5 | 15,0 | 18,7 | 25,0 | 3,0 | −0,06 | 37,5 |
| 63 | 80 | 1,50 | 2,25 | 3,00 | 3,75 | 4,50 | 7,50 | 15,0 | 18,0 | 22,5 | 30,0 | 3,0 | −0,06 | 45,0 |
| 65 | 85 | 1,85 | 2,77 | 3,70 | 4,62 | 5,55 | 9,25 | 18,5 | 22,2 | 27,7 | 37,0 | 3,5 | −0,06 | 63,0 |
| 70 | 90 | 1,97 | 2,95 | 3,94 | 4,92 | 5,90 | 9,85 | 19,7 | 23,6 | 29,5 | 39,4 | 3,5 | −0,06 | 69,0 |
| 75 | 95 | 2,09 | 3,13 | 4,18 | 5,22 | 6,28 | 10,5 | 20,9 | 25,1 | 31,4 | 41,8 | 3,5 | −0,06 | 73,2 |
| 80 | 100 | 2,22 | 3,33 | 4,44 | 5,55 | 6,65 | 11,1 | 22,2 | 26,6 | 33,3 | 44,4 | 3,5 | −0,06 | 77,8 |
| 85 | 105 | 2,34 | 3,51 | 4,68 | 5,85 | 7,05 | 11,7 | 23,4 | 28,1 | 35,1 | 46,8 | 3,5 | −0,06 | 82,0 |
| 90 | 110 | 2,47 | 3,70 | 4,94 | 6,17 | 7,40 | 12,4 | 24,7 | 29,6 | 37,1 | 49,4 | 3,5 | −0,06 | 86,5 |
| 95 | 115 | 2,59 | 3,88 | 5,18 | 6,47 | 7,77 | 13,0 | 25,9 | 31,1 | 38,9 | 51,8 | 3,5 | −0,06 | 90,7 |
| 100 | 120 | 2,72 | 4,08 | 5,44 | 6,80 | 8,15 | 13,6 | 27,2 | 32,6 | 40,8 | 54,4 | 3,5 | −0,06 | 95,2 |
| 100 | 125 | 3,47 | 5,20 | 6,94 | 8,67 | 10,4 | 17,3 | 34,7 | – | – | – | 3,5 | −0,08 | 122 |
| 105 | 130 | 3,62 | 5,43 | 7,22 | 9,05 | 10,8 | 18,1 | 36,2 | – | – | – | 3,5 | −0,08 | 127 |
| 110 | 140 | 4,62 | 6,93 | 9,22 | 11,5 | 13,9 | 23,1 | 46,2 | – | – | – | 3,5 | −0,08 | 162 |
| 120 | 150 | 5,00 | 7,50 | 10,0 | 12,5 | 15,0 | 25,0 | 50,0 | – | – | – | 3,5 | −0,08 | 175 |
| 130 | 160 | 5,36 | 8,04 | 10,7 | 13,4 | 16,1 | 26,8 | 53,6 | – | – | – | 3,5 | −0,08 | 188 |
| 140 | 170 | 5,73 | 8,60 | 11,5 | 14,3 | 17,2 | 28,5 | 57,3 | – | – | – | 3,5 | −0,08 | 201 |
| 150 | 180 | 6,10 | 9,15 | 12,2 | 15,2 | 18,3 | 30,5 | 61,0 | – | – | – | 3,5 | −0,08 | 214 |
| 160 | 190 | 6,47 | 9,70 | 12,9 | 16,2 | 19,4 | 32,3 | 64,7 | – | – | – | 3,5 | −0,08 | 227 |
| 170 | 200 | 6,85 | 10,3 | 13,7 | 17,1 | 20,6 | 34,3 | 68,5 | – | – | – | 3,5 | −0,08 | 240 |

Standard material - carbon spring steel. Standard finish - self finish

All dimensions in mm

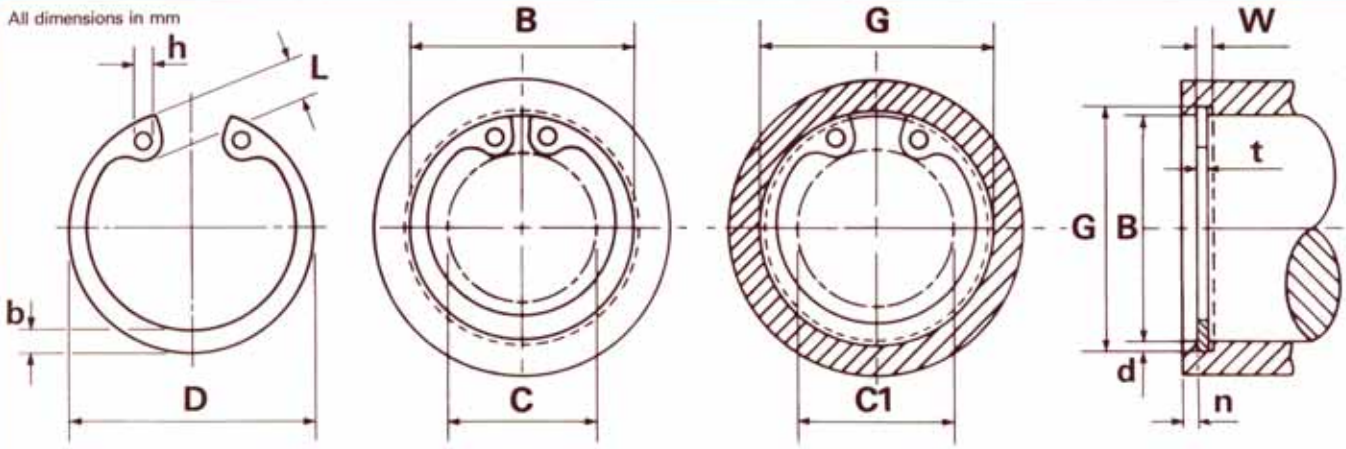


Circlip in bore

Circlip in groove

Sizes printed in blue are preferred sizes

Alternative lug for larger sizes

Most sizes over 200 mm are without lugs

Beam configuragion on some larger sizes

† Thrust load calculations see pages 9 & 10

| SIZE CODE | Bore B | Groove (G) G | Tol. | W | Tol. | n (min) | d ~ | Circlip (F) t | Tol. | D | Tol. | C | C1 | L (max) | b ~ | h (min) | Wt. (kg/k) | Tc† (N) | Tg† (N) |
|---|---|---|---|---|---|---|---|---|---|---|---|---|---|---|---|---|---|---|---|
| 0080 | 8 | 8.4 | +0.09 −0.00 | 0.90 | +0.14 −0.00 | 0.6 | 0.2 | 0.80 | +0.00 −0.05 | 8.7 | +0.36 −0.10 | 3.0 | 3.6 | 2.4 | 1.1 | 1.0 | 0.11 | 6200 | 600 |
| 0090 | 9 | 9.4 | | 0.90 | | 0.6 | 0.2 | 0.80 | | 9.8 | | 3.7 | 4.4 | 2.5 | 1.3 | 1.0 | 0.17 | 7000 | 680 |
| 0095 | 9.5 | 9.9 | | 1.10 | | 0.6 | 0.2 | 1.00 | | 10.3 | | 3.2 | 3.9 | 3.0 | 1.3 | 1.2 | 0.22 | 9300 | 720 |
| 0100 | 10 | 10.4 | +0.11 −0.00 | 1.10 | | 0.6 | 0.2 | 1.00 | | 10.8 | | 3.3 | 4.0 | 3.2 | 1.4 | 1.2 | 0.24 | 9700 | 750 |
| 0110 | 11 | 11.4 | | 1.10 | | 0.6 | 0.2 | 1.00 | | 11.8 | | 4.1 | 4.8 | 3.3 | 1.5 | 1.2 | 0.30 | 10700 | 830 |
| 0120 | 12 | 12.5 | | 1.10 | | 0.8 | 0.3 | 1.00 | | 13.0 | | 4.9 | 5.7 | 3.4 | 1.7 | 1.5 | 0.34 | 11700 | 1130 |
| 0130 | 13 | 13.6 | | 1.10 | | 0.9 | 0.3 | 1.00 | | 14.1 | | 5.4 | 6.4 | 3.6 | 1.8 | 1.5 | 0.39 | 12700 | 1470 |
| 0140 | 14 | 14.6 | | 1.10 | | 0.9 | 0.3 | 1.00 | | 15.1 | | 6.2 | 7.2 | 3.7 | 1.9 | 1.7 | 0.45 | 13600 | 1580 |
| 0150 | 15 | 15.7 | | 1.10 | | 1.1 | 0.4 | 1.00 | | 16.2 | | 7.2 | 8.3 | 3.7 | 2.0 | 1.7 | 0.48 | 14600 | 1980 |
| 0160 | 16 | 16.8 | | 1.10 | | 1.2 | 0.4 | 1.00 | | 17.3 | | 8.0 | 9.2 | 3.8 | 2.0 | 1.7 | 0.54 | 15600 | 2410 |
| 0170 | 17 | 17.8 | +0.13 −0.00 | 1.10 | | 1.2 | 0.4 | 1.00 | | 18.3 | +0.42 −0.13 | 8.8 | 10.0 | 3.9 | 2.1 | 1.7 | 0.59 | 16600 | 2560 |
| 0180 | 18 | 19.0 | | 1.10 | | 1.5 | 0.5 | 1.00 | | 19.5 | | 9.4 | 10.8 | 4.1 | 2.2 | 2.0 | 0.61 | 17500 | 3390 |
| 0190 | 19 | 20.0 | | 1.10 | | 1.5 | 0.5 | 1.00 | | 20.5 | | 10.4 | 11.8 | 4.1 | 2.2 | 2.0 | 0.72 | 18500 | 3580 |
| 0200 | 20 | 21.0 | | 1.10 | | 1.5 | 0.5 | 1.00 | | 21.5 | | 11.2 | 12.6 | 4.2 | 2.3 | 2.0 | 0.75 | 19500 | 3770 |
| 0210 | 21 | 22.0 | | 1.10 | | 1.5 | 0.5 | 1.00 | | 22.5 | | 12.2 | 13.6 | 4.2 | 2.4 | 2.0 | 0.84 | 20400 | 3960 |
| 0220 | 22 | 23.0 | +0.21 −0.00 | 1.10 | | 1.5 | 0.5 | 1.00 | | 23.5 | +0.42 −0.21 | 13.2 | 14.6 | 4.2 | 2.5 | 2.0 | 0.86 | 21400 | 4150 |
| 0230 | 23 | 24.1 | | 1.30 | | 1.7 | 0.6 | 1.20 | | 24.6 | | 14.2 | 15.7 | 4.2 | 2.5 | 2.0 | 1.20 | 26900 | 4770 |
| 0240 | 24 | 25.2 | | 1.30 | | 1.8 | 0.6 | 1.20 | | 25.9 | | 14.8 | 16.4 | 4.4 | 2.6 | 2.0 | 1.21 | 28000 | 5430 |
| 0250 | 25 | 26.2 | | 1.30 | | 1.8 | 0.6 | 1.20 | | 26.9 | | 15.5 | 17.2 | 4.5 | 2.7 | 2.0 | 1.33 | 29200 | 5650 |
| 0260 | 26 | 27.2 | | 1.30 | | 1.8 | 0.6 | 1.20 | +0.00 −0.06 | 27.9 | | 16.1 | 17.8 | 4.7 | 2.8 | 2.0 | 1.35 | 30400 | 5880 |
| 0270 | 27 | 28.4 | | 1.30 | | 2.1 | 0.7 | 1.20 | | 29.1 | +0.50 −0.25 | 17.1 | 19.0 | 4.7 | 2.9 | 2.0 | 1.55 | 31600 | 7130 |
| 0280 | 28 | 29.4 | | 1.30 | | 2.1 | 0.7 | 1.20 | | 30.1 | | 17.9 | 19.8 | 4.8 | 2.9 | 2.0 | 1.64 | 32700 | 7390 |
| 0290 | 29 | 30.4 | +0.25 −0.00 | 1.30 | | 2.1 | 0.7 | 1.20 | | 31.1 | | 18.9 | 20.8 | 4.8 | 3.0 | 2.0 | 1.74 | 33900 | 7650 |
| 0300 | 30 | 31.4 | | 1.30 | | 2.1 | 0.7 | 1.20 | | 32.1 | | 19.9 | 21.8 | 4.8 | 3.0 | 2.0 | 1.87 | 35100 | 7920 |
| 0310 | 31 | 32.7 | | 1.30 | | 2.6 | 0.9 | 1.20 | | 33.4 | | 20.0 | 22.3 | 5.2 | 3.2 | 2.5 | 2.20 | 36200 | 9930 |
| 0320 | 32 | 33.7 | | 1.30 | | 2.6 | 0.9 | 1.20 | | 34.4 | | 20.6 | 22.9 | 5.4 | 3.2 | 2.5 | 1.98 | 37400 | 10300 |
| 0330 | 33 | 34.7 | | 1.30 | | 2.6 | 0.9 | 1.20 | | 35.5 | | 21.6 | 23.9 | 5.4 | 3.3 | 2.5 | 2.13 | 36800 | 10600 |
| 0340 | 34 | 35.7 | | 1.60 | | 2.6 | 0.9 | 1.50 | | 36.5 | | 22.6 | 24.9 | 5.4 | 3.3 | 2.5 | 2.88 | 49700 | 10900 |
| 0350 | 35 | 37.0 | | 1.60 | | 3.0 | 1.0 | 1.50 | | 37.8 | | 23.6 | 26.2 | 5.4 | 3.4 | 2.5 | 2.93 | 51100 | 13200 |
| 0360 | 36 | 38.0 | | 1.60 | | 3.0 | 1.0 | 1.50 | | 38.8 | | 24.6 | 27.2 | 5.4 | 4.0 | 2.5 | 3.23 | 52600 | 13600 |
| 0370 | 37 | 39.0 | | 1.60 | | 3.0 | 1.0 | 1.50 | | 39.8 | | 25.4 | 28.0 | 5.5 | 3.2 | 2.5 | 2.98 | 54100 | 13900 |
| 0380 | 38 | 40.0 | | 1.60 | | 3.0 | 1.0 | 1.50 | | 40.8 | | 26.4 | 29.0 | 5.5 | 3.7 | 2.5 | 3.54 | 55500 | 14300 |
| 0400 | 40 | 42.5 | | 1.85 | | 3.8 | 1.3 | 1.75 | | 43.5 | +0.90 −0.39 | 27.8 | 30.9 | 5.8 | 3.9 | 2.5 | 4.63 | 56600 | 18800 |
| 0410 | 41 | 43.5 | | 1.85 | | 3.8 | 1.3 | 1.75 | | 44.5 | | 28.6 | 31.7 | 5.9 | 4.0 | 2.5 | 5.37 | 58000 | 19300 |
| 0420 | 42 | 44.5 | | 1.85 | | 3.8 | 1.3 | 1.75 | | 45.5 | | 29.6 | 32.7 | 5.9 | 4.1 | 2.5 | 5.21 | 59500 | 19800 |
| 0450 | 45 | 47.5 | | 1.85 | | 3.8 | 1.3 | 1.75 | | 48.5 | +1.10 −0.46 | 32.0 | 35.1 | 6.2 | 4.3 | 2.5 | 5.88 | 63700 | 21200 |
| 0470 | 47 | 49.5 | | 1.85 | | 3.8 | 1.3 | 1.75 | | 50.5 | | 33.5 | 36.7 | 6.4 | 4.4 | 2.5 | 6.13 | 66500 | 22100 |
| 0480 | 48 | 50.5 | | 1.85 | | 3.8 | 1.3 | 1.75 | | 51.5 | | 34.5 | 37.7 | 6.4 | 4.5 | 2.5 | 6.31 | 68000 | 22600 |
| 0500 | 50 | 53.0 | | 2.15 | | 4.5 | 1.5 | 2.00 | | 54.2 | | 36.3 | 40.0 | 6.5 | 4.6 | 2.5 | 8.01 | 80900 | 28300 |
| 0510 | 51 | 54.0 | | 2.15 | | 4.5 | 1.5 | 2.00 | | 55.2 | | 37.3 | 41.0 | 6.5 | 4.7 | 2.5 | 8.72 | 82500 | 28800 |
| 0520 | 52 | 55.0 | +0.30 −0.00 | 2.15 | | 4.5 | 1.5 | 2.00 | | 56.2 | | 37.9 | 41.6 | 6.7 | 4.7 | 2.5 | 8.91 | 84100 | 29400 |
| 0550 | 55 | 58.0 | | 2.15 | | 4.5 | 1.5 | 2.00 | | 59.2 | | 40.7 | 44.4 | 6.8 | 5.0 | 2.5 | 9.44 | 89000 | 31100 |
| 0560 | 56 | 59.0 | | 2.15 | | 4.5 | 1.5 | 2.00 | | 60.2 | | 41.7 | 45.4 | 6.8 | 5.1 | 2.5 | 9.75 | 90600 | 31700 |
| 0570 | 57 | 60.0 | | 2.15 | | 4.5 | 1.5 | 2.00 | +0.00 −0.07 | 62.2 | | 42.7 | 46.4 | 6.8 | 5.1 | 2.5 | 9.56 | 92200 | 32200 |
| 0580 | 58 | 61.0 | | 2.15 | | 4.5 | 1.5 | 2.00 | | 62.2 | | 43.5 | 47.2 | 6.9 | 5.2 | 2.5 | 10.36 | 93800 | 32800 |
| 0600 | 60 | 63.0 | | 2.15 | | 4.5 | 1.5 | 2.00 | | 64.2 | | 44.7 | 48.4 | 7.3 | 5.4 | 2.5 | 11.15 | 97100 | 33900 |
| 0620 | 62 | 65.0 | | 2.15 | | 4.5 | 1.5 | 2.00 | | 66.2 | | 46.7 | 50.4 | 7.3 | 5.5 | 2.5 | 11.59 | 100000 | 35100 |
| 0630 | 63 | 66.0 | | 2.15 | | 4.5 | 1.5 | 2.00 | | 67.2 | | 47.7 | 51.4 | 7.3 | 5.6 | 2.5 | 11.78 | 102000 | 35600 |
| 0640 | 64 | 67.0 | | 2.15 | | 4.5 | 1.5 | 2.00 | | 68.2 | | 48.7 | 52.4 | 7.3 | 5.2 | 2.5 | 16.80 | 104000 | 36200 |
| 0650 | 65 | 68.0 | | 2.65 | | 4.5 | 1.5 | 2.50 | | 69.2 | | 49.0 | 52.8 | 7.6 | 5.8 | 3.0 | 17.71 | 131000 | 36800 |

Standard material - carbon spring steel. Standard finish - phosphate and oil.

| SIZE CODE | Bore B | Groove (G) G | Tol. | W | Tol. | n (min) | d ~ | Circlip (F) t | Tol. | D | Tol. | C | C1 | L (max) | b ~ | h (min) | Wt. (kg/k) | Tc† (N) | Tg† (N) |
|---|---|---|---|---|---|---|---|---|---|---|---|---|---|---|---|---|---|---|---|
| 0670 | 67 | 70.0 | +0.30 −0.00 | 2.65 | +0.14 −0.00 | 4.5 | 1.5 | 2.50 | +0.00 −0.07 | 72.5 | +1.10 −0.46 | 50.8 | 54.6 | 7.7 | 6.0 | 3.0 | 17.71 | 136000 | 37900 |
| 0680 | 68 | 71.0 | | 2.65 | | 4.5 | 1.5 | 2.50 | | 72.5 | | 51.6 | 55.4 | 7.8 | 6.1 | 3.0 | 17.72 | 138000 | 38500 |
| 0700 | 70 | 73.0 | | 2.65 | | 4.5 | 1.5 | 2.50 | | 74.5 | | 53.6 | 57.4 | 7.8 | 6.2 | 3.0 | 17.65 | 142000 | 39600 |
| 0720 | 72 | 75.0 | | 2.65 | | 4.5 | 1.5 | 2.50 | | 76.5 | | 55.6 | 59.4 | 7.8 | 6.4 | 3.0 | 19.70 | 146000 | 40700 |
| 0750 | 75 | 78.0 | | 2.65 | | 4.5 | 1.5 | 2.50 | | 79.5 | | 58.6 | 62.4 | 7.8 | 6.6 | 3.0 | 20.62 | 152000 | 42400 |
| 0760 | 76 | 79.0 | +0.35 −0.00 | 2.65 | | 4.5 | 1.5 | 2.50 | | 80.7 | +1.30 −0.54 | 59.6 | 63.4 | 7.8 | 6.1 | 3.0 | 22.68 | 154000 | 43000 |
| 0780 | 78 | 81.0 | | 2.65 | | 4.5 | 1.5 | 2.50 | | 82.5 | | 60.1 | 64.0 | 8.5 | 6.8 | 3.0 | 22.46 | 158000 | 44100 |
| 0800 | 80 | 83.5 | | 2.65 | | 5.3 | 1.8 | 2.50 | | 85.5 | | 62.1 | 66.5 | 8.5 | 7.0 | 3.0 | 21.38 | 162000 | 52800 |
| 0820 | 82 | 85.5 | | 2.65 | | 5.3 | 1.8 | 2.50 | | 87.5 | | 64.1 | 68.5 | 8.5 | 6.2 | 3.0 | 22.27 | 166000 | 54100 |
| 0850 | 85 | 88.5 | | 3.15 | | 5.3 | 1.8 | 3.00 | +0.00 −0.08 | 90.5 | | 66.9 | 71.3 | 8.6 | 7.2 | 3.5 | 31.78 | 206000 | 56100 |
| 0880 | 88 | 91.5 | | 3.15 | | 5.3 | 1.8 | 3.00 | | 93.5 | | 69.9 | 74.3 | 8.6 | 7.4 | 3.5 | 32.94 | 214000 | 58100 |
| 0900 | 90 | 93.5 | | 3.15 | | 5.3 | 1.8 | 3.00 | | 95.5 | | 71.9 | 76.3 | 8.6 | 7.6 | 3.5 | 33.35 | 218000 | 59400 |
| 0920 | 92 | 95.5 | | 3.15 | | 5.3 | 1.8 | 3.00 | | 97.5 | | 73.7 | 78.1 | 8.7 | 7.8 | 3.5 | 35.72 | 223000 | 60700 |
| 0950 | 95 | 98.5 | | 3.15 | | 5.3 | 1.8 | 3.00 | | 100.5 | | 76.5 | 80.9 | 8.8 | 8.1 | 3.5 | 38.88 | 231000 | 62700 |
| 0980 | 98 | 101.5 | | 3.15 | | 5.3 | 1.8 | 3.00 | | 103.5 | | 79.0 | 83.5 | 9.0 | 8.3 | 3.5 | 42.16 | 238000 | 64700 |
| 1000 | 100 | 103.5 | +0.54 −0.00 | 3.15 | | 5.3 | 1.8 | 3.00 | | 105.5 | | 80.6 | 85.1 | 9.2 | 8.4 | 3.5 | 43.41 | 243000 | 66000 |
| 1020 | 102 | 106.0 | | 4.15 | | 6.0 | 2.0 | 4.00 | +0.00 −0.10 | 108.0 | | 82.0 | 87.0 | 9.5 | 8.5 | 3.5 | 55.20 | 330000 | 76900 |
| 1050 | 105 | 109.0 | | 4.15 | | 6.0 | 2.0 | 4.00 | | 112.0 | | 85.0 | 90.0 | 9.5 | 8.7 | 3.5 | 59.20 | 340000 | 79200 |
| 1080 | 108 | 112.0 | | 4.15 | | 6.0 | 2.0 | 4.00 | | 115.0 | | 88.0 | 93.0 | 9.5 | 8.9 | 3.5 | 62.60 | 350000 | 81400 |
| 1100 | 110 | 114.0 | | 4.15 | | 6.0 | 2.0 | 4.00 | | 117.0 | | 88.2 | 93.2 | 10.4 | 9.0 | 3.5 | 71.75 | 356000 | 82900 |
| 1120 | 112 | 116.0 | +0.63 −0.00 | 4.15 | +0.18 −0.00 | 6.0 | 2.0 | 4.00 | | 119.0 | +1.50 −0.63 | 90.0 | 95.0 | 10.5 | 9.1 | 3.5 | 70.68 | 362000 | 84400 |
| 1150 | 115 | 119.0 | | 4.15 | | 6.0 | 2.0 | 4.00 | | 122.0 | | 93.0 | 98.0 | 10.5 | 9.3 | 3.5 | 73.1[illegible] | 372000 | 86700 |
| 1200 | 120 | 124.0 | | 4.15 | | 6.0 | 2.0 | 4.00 | | 127.0 | | 96.9 | 102.0 | 11.0 | 9.7 | 3.5 | 80.40 | 388000 | 90500 |
| 1250 | 125 | 129.0 | | 4.15 | | 6.0 | 2.0 | 4.00 | | 132.0 | | 101.9 | 107.0 | 11.0 | 10.0 | 4.0 | 81.20 | 405000 | 94300 |
| 1270 | 127 | 131.0 | | 4.15 | | 6.0 | 2.0 | 4.00 | | 135.0 | | 103.9 | 109.0 | 11.0 | 10.0 | 4.0 | 80.80 | 411000 | 95800 |
| 1300 | 130 | 134.0 | | 4.15 | | 6.0 | 2.0 | 4.00 | | 137.0 | | 106.9 | 112.0 | 11.0 | 10.2 | 4.0 | 85.13 | 421000 | 98000 |
| 1350 | 135 | 139.0 | | 4.15 | | 6.0 | 2.0 | 4.00 | | 142.0 | | 111.5 | 116.0 | 11.2 | 10.5 | 4.0 | 94.79 | 437000 | 102000 |
| 1400 | 140 | 144.0 | | 4.15 | | 6.0 | 2.0 | 4.00 | | 147.0 | | 116.5 | 121.0 | 11.2 | 10.7 | 4.0 | 98.61 | 453000 | 106000 |
| 1450 | 145 | 149.0 | | 4.15 | | 6.0 | 2.0 | 4.00 | | 152.0 | | 121.0 | 126.0 | 11.4 | 10.9 | 4.0 | 106.50 | 469000 | 109000 |
| 1500 | 150 | 155.0 | | 4.15 | | 7.5 | 2.5 | 4.00 | | 158.0 | | 124.8 | 131.0 | 12.0 | 11.2 | 4.0 | 106.80 | 485000 | 141000 |
| 1550 | 155 | 160.0 | +0.72 −0.00 | 4.15 | | 7.5 | 2.5 | 4.00 | | 164.0 | +1.70 −0.72 | 129.8 | 136.0 | 12.0 | 11.4 | 4.0 | 128.00 | 502000 | 146000 |
| 1600 | 160 | 165.0 | | 4.15 | | 7.5 | 2.5 | 4.00 | | 169.0 | | 132.7 | 139.0 | 13.0 | 11.6 | 4.0 | 130.50 | 518000 | 151000 |
| 1650 | 165 | 170.0 | | 4.15 | | 7.5 | 2.5 | 4.00 | | 174.5 | | 137.7 | 144.0 | 13.0 | 11.8 | 4.0 | 132.00 | 534000 | 156000 |
| 1700 | 170 | 175.0 | | 4.15 | | 7.5 | 2.5 | 4.00 | | 179.5 | | 141.6 | 148.0 | 13.5 | 12.0 | 4.0 | 149.50 | 550000 | 160000 |
| 1750 | 175 | 180.0 | | 4.15 | | 7.5 | 2.5 | 4.00 | | 184.5 | | 146.6 | 153.0 | 13.5 | 12.0 | 4.0 | 158.50 | 566000 | 165000 |
| 1800 | 180 | 185.0 | | 4.15 | | 7.5 | 2.5 | 4.00 | | 189.5 | | 150.2 | 156.0 | 14.2 | 13.0 | 4.0 | 168.00 | 583000 | 170000 |
| 1850 | 185 | 190.0 | | 4.15 | | 7.5 | 2.5 | 4.00 | | 194.5 | | 155.2 | 161.0 | 14.2 | 13.0 | 4.0 | 177.50 | 599000 | 174000 |
| 1900 | 190 | 195.0 | | 4.15 | | 7.5 | 2.5 | 4.00 | | 199.5 | | 160.2 | 166.0 | 14.3 | 13.0 | 4.0 | 184.00 | 615000 | 179000 |
| 1950 | 195 | 200.0 | | 4.15 | | 7.5 | 2.5 | 4.00 | | 204.5 | | 165.2 | 171.0 | 14.2 | 13.0 | 4.0 | 189.60 | 631000 | 184000 |
| 2000 | 200 | 205.0 | | 4.15 | | 7.5 | 2.5 | 4.00 | | 209.5 | | 170.2 | 176.0 | 14.3 | 13.0 | 4.0 | 196.00 | 647000 | 188000 |
| 2100 | 210 | 216.0 | | 5.15 | | 9.0 | 3.0 | 5.00 | +0.00 −0.12 | 222.0 | | 180.2 | 187.0 | 14.2 | 14.0 | 4.0 | 263.00 | 739000 | 237000 |
| 2200 | 220 | 226.0 | | 5.15 | | 9.0 | 3.0 | 5.00 | | 232.0 | | 190.2 | 197.0 | 14.2 | 14.0 | 4.0 | 276.00 | 774000 | 249000 |
| 2300 | 230 | 236.0 | | 5.15 | | 9.0 | 3.0 | 5.00 | | 242.0 | | 200.2 | 207.0 | 14.2 | 14.0 | 4.0 | 291.00 | 809000 | 260000 |
| 2400 | 240 | 246.0 | | 5.15 | | 9.0 | 3.0 | 5.00 | | 252.0 | | 210.2 | 217.0 | 14.2 | 14.0 | 4.0 | 304.00 | 845000 | 271000 |
| 2500 | 250 | 256.0 | | 5.15 | | 9.0 | 3.0 | 5.00 | | 262.0 | | 220.2 | 227.0 | 14.2 | 14.0 | 4.0 | 318.50 | 880000 | 283000 |
| 2600 | 260 | 268.0 | +0.81 −0.00 | 5.15 | | 12.0 | 4.0 | 5.00 | | 275.0 | +2.00 −0.81 | 226.0 | 235.0 | 16.2 | 16.0 | 5.0 | 385.00 | 915000 | 392000 |
| 2700 | 270 | 278.0 | | 5.15 | | 12.0 | 4.0 | 5.00 | | 285.0 | | 236.0 | 245.0 | 16.2 | 16.0 | 5.0 | 401.50 | 950000 | 407000 |
| 2800 | 280 | 288.0 | | 5.15 | | 12.0 | 4.0 | 5.00 | | 295.0 | | 246.0 | 255.0 | 16.2 | 16.0 | 5.0 | 417.50 | 985000 | 422000 |
| 2900 | 290 | 298.0 | | 5.15 | | 12.0 | 4.0 | 5.00 | | 305.0 | | 256.0 | 265.0 | 16.2 | 16.0 | 5.0 | 433.40 | 1020000 | 437000 |
| 3000 | 300 | 308.0 | | 5.15 | | 12.0 | 4.0 | 5.00 | | 315.0 | | 266.0 | 275.0 | 16.2 | 16.0 | 5.0 | 446.00 | 1060000 | 452000 |
| 3100 | 310 | 320.0 | +0.89 −0.00 | 6.20 | +0.22 −0.00 | 15.0 | 5.0 | 6.00 | +0.00 −0.18 | 327.0 | +2.50 −1.00 | 267.8 | 279.0 | 20.2 | 20.0 | 6.0 | 658.50 | 1310000 | 584000 |
| 3200 | 320 | 330.0 | | 6.20 | | 15.0 | 5.0 | 6.00 | | 337.0 | | 277.8 | 289.0 | 20.2 | 20.0 | 6.0 | 682.00 | 1350000 | 603000 |
| 3300 | 330 | 340.0 | | 6.20 | | 15.0 | 5.0 | 6.00 | | 347.0 | | 287.8 | 299.0 | 20.2 | 20.0 | 6.0 | 705.00 | 1390000 | 622000 |
| 3400 | 340 | 350.0 | | 6.20 | | 15.0 | 5.0 | 6.00 | | 357.0 | | 297.8 | 309.0 | 20.2 | 20.0 | 6.0 | 729.00 | 1440000 | 641000 |
| 3500 | 350 | 360.0 | | 6.20 | | 15.0 | 5.0 | 6.00 | | 367.0 | | 307.8 | 319.0 | 20.2 | 20.0 | 6.0 | 752.50 | 1480000 | 660000 |
| 3600 | 360 | 370.0 | | 6.20 | | 15.0 | 5.0 | 6.00 | | 377.0 | | 317.8 | 329.0 | 20.2 | 20.0 | 6.0 | 769.00 | 1520000 | 679000 |
| 3700 | 370 | 380.0 | | 6.20 | | 15.0 | 5.0 | 6.00 | | 387.0 | | 327.8 | 339.0 | 20.2 | 20.0 | 6.0 | 793.00 | 1560000 | 697000 |
| 3800 | 380 | 390.0 | | 6.20 | | 15.0 | 5.0 | 6.00 | | 397.0 | | 337.8 | 349.0 | 20.2 | 20.0 | 6.0 | 817.00 | 1610000 | 716000 |
| 3900 | 390 | 400.0 | | 6.20 | | 15.0 | 5.0 | 6.00 | | 407.0 | | 347.8 | 359.0 | 20.2 | 20.0 | 6.0 | 838.50 | 1650000 | 735000 |
| 4000 | 400 | 410.0 | | 6.20 | | 15.0 | 5.0 | 6.00 | | 417.0 | | 357.8 | 369.0 | 20.2 | 20.0 | 6.0 | 862.50 | 1690000 | 754000 |

## Reference to Table Headings

A = Free gap
a = Radial depth
B = Bore diameter
b = Beam dimension
C = Clearance on shaft or in bore
$C_1$ = Clearance in groove
D = Free diameter (Working)
$D_1$ = Free diamater (Non-functional)
d = Groove depth
E = End play take-up
F = Circlip details
G = Groove diameter
H = Height
h = Hole diameter
L = Lug depth
n = Edge margin
$n_1$ = Shaft or bore face to retained face
r = Radius
S = Shaft diameter
Tc = Thrust load for circlip
Tg = Thrust load of groove
t = Thickness
W = Groove width
$\omega$ = Wing dimension
Wt = Weight
X = Outer groove wall to retained face

## Abbreviations used

B.S. = British Standard
dec. = Decimal
frac. = Fraction
kg/k = Kilogrammes per thousand
lb.f = Pounds force
lb/k = Pounds per thousand
max. = Maximum
min. = Minimum
N = Newton
Nom. = Nominal
Tol. = Tolerance

All dimensions in mm

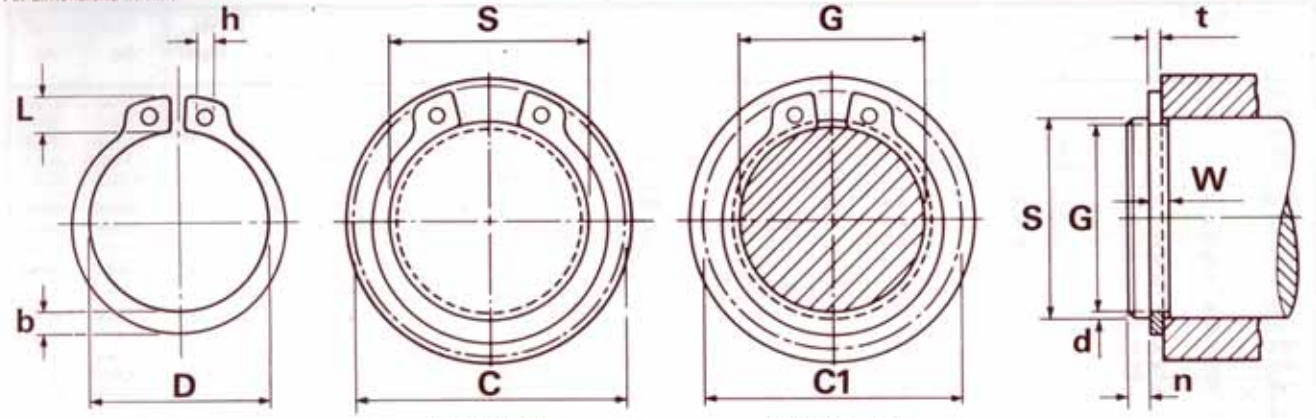


Circlip on shaft

Circlip in groove

Lug for sizes 3 to 9 mm

Alternative lug for sizes 4-8 mm

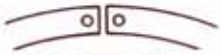

Most sizes over 185 mm are without lugs

Beam configuration on some larger sizes

Sizes printed in blue are preferred sizes

† Thrust load calculations see pages 9 & 10

| SIZE CODE | Shaft S | Groove (G) G | Tol. | W | Tol. | n (min) | d ~ | Circlip (F) t | Tol. | D | Tol. | C | C1 | L (max) | b ~ | h (min) | Wt. (kg/k) | Tc† (N) | Tg† (N) |
|---|---|---|---|---|---|---|---|---|---|---|---|---|---|---|---|---|---|---|---|
| 0030 | 3 | 2.8 | +0.00 −0.04 | 0.50 | | 0.3 | 0.10 | 0.40 | | 2.7 | | 7.0 | 6.6 | 1.9 | 0.8 | 1.0 | 0.02 | 1170 | 110 |
| 0040 | 4 | 3.8 | | 0.50 | | 0.3 | 0.10 | 0.40 | | 3.7 | +0.04 −0.15 | 8.6 | 8.2 | 2.2 | 0.9 | 1.0 | 0.03 | 1600 | 150 |
| 0050 | 5 | 4.8 | +0.00 −0.048 | 0.70 | | 0.3 | 0.10 | 0.60 | +0.00 −0.05 | 4.7 | | 10.3 | 9.8 | 2.5 | 1.1 | 1.0 | 0.08 | 2900 | 190 |
| 0060 | 6 | 5.7 | | 0.80 | | 0.5 | 0.15 | 0.70 | | 5.6 | | 11.7 | 11.1 | 2.7 | 1.3 | 1.2 | 0.13 | 4100 | 340 |
| 0070 | 7 | 6.7 | | 0.90 | | 0.5 | 0.15 | 0.80 | | 6.5 | +0.06 −0.18 | 13.5 | 12.9 | 3.1 | 1.4 | 1.2 | 0.18 | 5500 | 400 |
| 0080 | 8 | 7.6 | +0.00 −0.06 | 0.90 | | 0.6 | 0.20 | 0.80 | | 7.4 | | 14.7 | 14.0 | 3.2 | 1.5 | 1.2 | 0.20 | 6200 | 600 |
| 0090 | 9 | 8.6 | | 1.10 | | 0.6 | 0.20 | 1.00 | | 8.4 | | 16.0 | 15.2 | 3.3 | 1.7 | 1.2 | 0.32 | 8800 | 680 |
| 0100 | 10 | 9.6 | | 1.10 | | 0.6 | 0.20 | 1.00 | | 9.3 | | 17.0 | 16.2 | 3.3 | 1.8 | 1.5 | 0.40 | 9700 | 750 |
| 0110 | 11 | 10.5 | +0.00 −0.11 | 1.10 | | 0.8 | 0.25 | 1.00 | | 10.2 | | 18.0 | 17.1 | 3.3 | 1.8 | 1.5 | 0.41 | 10700 | 1040 |
| 0120 | 12 | 11.5 | | 1.10 | | 0.8 | 0.25 | 1.00 | | 11.0 | | 19.0 | 18.1 | 3.3 | 1.8 | 1.7 | 0.45 | 11700 | 1130 |
| 0130 | 13 | 12.4 | | 1.10 | | 0.9 | 0.30 | 1.00 | | 11.9 | +0.10 −0.36 | 20.2 | 19.2 | 3.4 | 2.0 | 1.7 | 0.52 | 12700 | 1470 |
| 0140 | 14 | 13.4 | | 1.10 | | 0.9 | 0.30 | 1.00 | | 12.9 | | 21.4 | 20.4 | 3.5 | 2.1 | 1.7 | 0.56 | 13600 | 1580 |
| 0150 | 15 | 14.3 | | 1.10 | | 1.1 | 0.35 | 1.00 | | 13.8 | | 22.6 | 21.5 | 3.6 | 2.2 | 1.7 | 0.62 | 14600 | 1980 |
| 0160 | 16 | 15.2 | | 1.10 | | 1.2 | 0.40 | 1.00 | | 14.7 | | 23.8 | 22.6 | 3.7 | 2.2 | 1.7 | 0.69 | 15600 | 2410 |
| 0170 | 17 | 16.2 | | 1.10 | | 1.2 | 0.40 | 1.00 | | 15.7 | | 25.0 | 23.8 | 3.8 | 2.3 | 1.7 | 0.77 | 16600 | 2560 |
| 0180 | 18 | 17.0 | | 1.30 | | 1.5 | 0.50 | 1.20 | | 16.5 | | 26.2 | 24.8 | 3.9 | 2.4 | 2.0 | 0.99 | 21000 | 3390 |
| 0190 | 19 | 18.0 | | 1.30 | | 1.5 | 0.50 | 1.20 | | 17.5 | | 27.2 | 25.8 | 3.9 | 2.5 | 2.0 | 1.10 | 22200 | 3580 |
| 0200 | 20 | 19.0 | | 1.30 | | 1.5 | 0.50 | 1.20 | | 18.5 | | 28.4 | 27.0 | 4.0 | 2.6 | 2.0 | 1.18 | 23400 | 3770 |
| 0210 | 21 | 20.0 | +0.00 −0.13 | 1.30 | | 1.5 | 0.50 | 1.20 | | 19.5 | +0.13 −0.42 | 29.6 | 28.2 | 4.1 | 2.7 | 2.0 | 1.26 | 24500 | 3960 |
| 0220 | 22 | 21.0 | | 1.30 | | 1.5 | 0.50 | 1.20 | | 20.5 | | 30.8 | 29.4 | 4.2 | 2.8 | 2.0 | 1.39 | 25700 | 4150 |
| 0230 | 23 | 22.0 | | 1.30 | | 1.5 | 0.50 | 1.20 | | 21.5 | | 32.0 | 30.6 | 4.3 | 2.9 | 2.0 | 1.54 | 26900 | 4340 |
| 0240 | 24 | 22.9 | | 1.30 | | 1.7 | 0.55 | 1.20 | +0.00 −0.06 | 22.2 | | 33.2 | 31.7 | 4.4 | 3.0 | 2.0 | 1.52 | 28000 | 4980 |
| 0250 | 25 | 23.9 | | 1.30 | | 1.7 | 0.55 | 1.20 | | 23.2 | | 34.2 | 32.7 | 4.4 | 3.0 | 2.0 | 1.70 | 29200 | 5180 |
| 0260 | 26 | 24.9 | +0.00 −0.21 | 1.30 | | 1.7 | 0.55 | 1.20 | | 24.2 | | 35.5 | 33.9 | 4.5 | 3.1 | 2.0 | 1.75 | 30400 | 5390 |
| 0270 | 27 | 25.6 | | 1.30 | +0.14 −0.00 | 2.1 | 0.70 | 1.20 | | 24.9 | +0.21 −0.42 | 36.7 | 34.8 | 4.6 | 3.1 | 2.0 | 1.89 | 31600 | 7130 |
| 0280 | 28 | 26.6 | | 1.60 | | 2.1 | 0.70 | 1.50 | | 25.9 | | 37.9 | 36.0 | 4.7 | 3.2 | 2.0 | 2.47 | 40900 | 7390 |
| 0290 | 29 | 27.6 | | 1.60 | | 2.1 | 0.70 | 1.50 | | 26.9 | | 39.1 | 37.2 | 4.8 | 3.4 | 2.0 | 2.75 | 42400 | 7650 |
| 0300 | 30 | 28.6 | | 1.60 | | 2.1 | 0.70 | 1.50 | | 27.9 | | 40.5 | 38.6 | 5.0 | 3.5 | 2.0 | 2.93 | 43800 | 7920 |
| 0320 | 32 | 30.3 | | 1.60 | | 2.6 | 0.85 | 1.50 | | 29.6 | | 43.0 | 40.7 | 5.2 | 3.6 | 2.5 | 3.02 | 46700 | 10300 |
| 0330 | 33 | 31.3 | | 1.60 | | 2.6 | 0.85 | 1.50 | | 30.5 | | 44.0 | 41.7 | 5.2 | 3.7 | 2.5 | 3.30 | 48200 | 10600 |
| 0340 | 34 | 32.3 | | 1.60 | | 2.6 | 0.85 | 1.50 | | 31.5 | +0.25 −0.50 | 45.4 | 43.1 | 5.4 | 3.8 | 2.5 | 3.72 | 49700 | 10900 |
| 0350 | 35 | 33.0 | | 1.60 | | 3.0 | 1.00 | 1.50 | | 32.2 | | 46.8 | 44.2 | 5.6 | 3.9 | 2.5 | 3.78 | 51100 | 13200 |
| 0360 | 36 | 34.0 | | 1.85 | | 3.0 | 1.00 | 1.75 | | 33.2 | | 47.8 | 45.2 | 5.6 | 4.0 | 2.5 | 4.55 | 51400 | 13600 |
| 0380 | 38 | 36.0 | | 1.85 | | 3.0 | 1.00 | 1.75 | | 35.2 | | 50.2 | 47.6 | 5.8 | 4.2 | 2.5 | 5.08 | 54800 | 14300 |
| 0400 | 40 | 37.5 | +0.00 −0.25 | 1.85 | | 3.8 | 1.25 | 1.75 | | 36.5 | | 52.6 | 49.5 | 6.0 | 5.0 | 2.5 | 5.54 | 56600 | 18800 |
| 0420 | 42 | 39.5 | | 1.85 | | 3.8 | 1.25 | 1.75 | | 38.5 | | 55.7 | 52.5 | 6.5 | 5.0 | 2.5 | 5.99 | 59500 | 19800 |
| 0450 | 45 | 42.5 | | 1.85 | | 3.8 | 1.25 | 1.75 | | 41.5 | | 59.1 | 55.9 | 6.7 | 5.0 | 2.5 | 6.75 | 63700 | 21200 |
| 0460 | 46 | 43.5 | | 1.85 | | 3.8 | 1.25 | 1.75 | | 42.5 | +0.39 −0.90 | 60.1 | 56.9 | 6.7 | 5.0 | 2.5 | 7.24 | 65100 | 21700 |
| 0470 | 47 | 44.5 | | 1.85 | | 3.8 | 1.25 | 1.75 | | 43.5 | | 61.3 | 58.1 | 6.8 | 5.0 | 2.5 | 7.30 | 66500 | 22100 |
| 0480 | 48 | 45.5 | | 1.85 | | 3.8 | 1.25 | 1.75 | | 44.5 | | 62.5 | 59.3 | 6.9 | 5.0 | 2.5 | 7.51 | 67900 | 22600 |
| 0500 | 50 | 47.0 | | 2.15 | | 4.5 | 1.50 | 2.00 | | 45.8 | | 64.5 | 60.8 | 6.9 | 5.5 | 2.5 | 9.88 | 80900 | 28300 |
| 0520 | 52 | 49.0 | | 2.15 | | 4.5 | 1.50 | 2.00 | | 47.8 | | 66.7 | 63.0 | 7.0 | 5.5 | 2.5 | 9.53 | 84100 | 29400 |
| 0540 | 54 | 51.0 | | 2.15 | | 4.5 | 1.50 | 2.00 | | 49.8 | | 69.0 | 65.2 | 7.1 | 5.5 | 2.5 | 10.30 | 87400 | 30500 |
| 0550 | 55 | 52.0 | | 2.15 | | 4.5 | 1.50 | 2.00 | | 50.8 | | 70.2 | 66.4 | 7.2 | 5.5 | 2.5 | 10.41 | 89000 | 31100 |
| 0560 | 56 | 53.0 | +0.00 −0.30 | 2.15 | | 4.5 | 1.50 | 2.00 | +0.00 −0.07 | 51.8 | +0.46 −1.10 | 71.6 | 67.6 | 7.3 | 5.5 | 2.5 | 10.50 | 90600 | 31700 |
| 0580 | 58 | 55.0 | | 2.15 | | 4.5 | 1.50 | 2.00 | | 53.8 | | 73.6 | 69.6 | 7.3 | 5.6 | 2.5 | 12.47 | 93800 | 32800 |
| 0600 | 60 | 57.0 | | 2.15 | | 4.5 | 1.50 | 2.00 | | 55.8 | | 75.6 | 71.8 | 7.4 | 5.8 | 2.5 | 13.69 | 97100 | 33900 |
| 0620 | 62 | 59.0 | | 2.15 | | 4.5 | 1.50 | 2.00 | | 57.8 | | 77.8 | 74.0 | 7.5 | 6.0 | 2.5 | 12.36 | 100000 | 35100 |
| 0630 | 63 | 60.0 | | 2.15 | | 4.5 | 1.50 | 2.00 | | 58.8 | | 79.0 | 75.2 | 7.6 | 6.2 | 2.5 | 13.10 | 102000 | 35600 |
| 0650 | 65 | 62.0 | | 2.65 | | 4.5 | 1.50 | 2.50 | | 60.8 | | 81.4 | 77.6 | 7.8 | 6.3 | 3.0 | 20.44 | 131000 | 36800 |

Standard material - carbon spring steel. Standard finish - phosphate and oil.

| SIZE CODE | Shaft S | Groove (G) G | Tol. | W | Tol. | n (min) | d ~ | Circlip (F) t | Tol. | D | Tol. | C | C1 | L (max) | b ~ | h (min) | Wt. (kg/k) | Tc† (N) | Tg† (N) |
|---|---|---|---|---|---|---|---|---|---|---|---|---|---|---|---|---|---|---|---|
| 0670 | 67 | 64.0 | | 2.65 | | 4.5 | 1.50 | 2.50 | | 62.5 | | 83.6 | 79.8 | 7.9 | 6.4 | 3.0 | 20.43 | 135000 | 37900 |
| 0680 | 68 | 65.0 | | 2.65 | | 4.5 | 1.50 | 2.50 | | 63.5 | | 84.4 | 81.0 | 8.0 | 6.5 | 3.0 | 19.55 | 138000 | 38500 |
| 0700 | 70 | 67.0 | | 2.65 | | 4.5 | 1.50 | 2.50 | | 65.5 | | 87.0 | 83.2 | 8.1 | 6.6 | 3.0 | 22.13 | 142000 | 39600 |
| 0720 | 72 | 69.0 | +0.00 −0.30 | 2.65 | +0.14 −0.00 | 4.5 | 1.50 | 2.50 | +0.00 −0.07 | 67.5 | +0.46 −1.10 | 89.2 | 85.4 | 8.2 | 6.8 | 3.0 | 21.60 | 146000 | 40700 |
| 0750 | 75 | 72.0 | | 2.65 | | 4.5 | 1.50 | 2.50 | | 70.5 | | 92.7 | 88.8 | 8.4 | 7.0 | 3.0 | 24.65 | 152000 | 42400 |
| 0770 | 77 | 74.0 | | 2.65 | | 4.5 | 1.50 | 2.50 | | 72.5 | | 94.9 | 91.0 | 8.5 | 7.2 | 3.0 | 24.26 | 156000 | 43500 |
| 0780 | 78 | 75.0 | | 2.65 | | 4.5 | 1.50 | 2.50 | | 73.5 | | 96.1 | 92.2 | 8.6 | 7.3 | 3.0 | 28.10 | 158000 | 44100 |
| 0800 | 80 | 76.5 | | 2.65 | | 5.3 | 1.75 | 2.50 | | 74.5 | | 98.1 | 93.7 | 8.6 | 7.4 | 3.0 | 26.68 | 162000 | 52800 |
| 0820 | 82 | 78.5 | | 2.65 | | 5.3 | 1.75 | 2.50 | | 76.5 | | 100.3 | 95.9 | 8.7 | 7.6 | 3.0 | 28.35 | 166000 | 54100 |
| 0850 | 85 | 81.5 | | 3.15 | | 5.3 | 1.75 | 3.00 | | 79.5 | | 103.3 | 98.9 | 8.7 | 7.8 | 3.5 | 35.40 | 206000 | 56100 |
| 0880 | 88 | 84.5 | +0.00 −0.35 | 3.15 | | 5.3 | 1.75 | 3.00 | | 82.5 | | 106.5 | 102.0 | 8.8 | 8.0 | 3.5 | 39.85 | 214000 | 58100 |
| 0900 | 90 | 86.5 | | 3.15 | | 5.3 | 1.75 | 3.00 | +0.00 −0.08 | 84.5 | | 108.5 | 104.0 | 8.8 | 8.2 | 3.5 | 38.89 | 218000 | 59400 |
| 0950 | 95 | 91.5 | | 3.15 | | 5.3 | 1.75 | 3.00 | | 89.5 | | 114.8 | 111.0 | 9.4 | 8.6 | 3.5 | 42.39 | 231000 | 62700 |
| 0980 | 98 | 94.5 | | 3.15 | | 5.3 | 1.75 | 3.00 | | 91.5 | | 118.6 | 114.0 | 9.8 | 9.0 | 3.5 | 54.00 | 238000 | 64700 |
| 1000 | 100 | 96.5 | | 3.15 | | 5.3 | 1.75 | 3.00 | | 94.5 | | 120.2 | 116.0 | 9.6 | 9.0 | 3.5 | 48.86 | 243000 | 66000 |
| 1020 | 102 | 98.0 | | 4.15 | | 6.0 | 2.00 | 4.00 | | 95.0 | +0.54 −1.30 | 122.4 | 118.0 | 9.7 | 9.2 | 3.5 | 68.73 | 330000 | 76900 |
| 1050 | 105 | 101.0 | | 4.15 | | 6.0 | 2.00 | 4.00 | | 98.0 | | 126.2 | 122.0 | 10.1 | 9.3 | 3.5 | 73.16 | 340000 | 79200 |
| 1080 | 108 | 104.0 | +0.00 −0.54 | 4.15 | | 6.0 | 2.00 | 4.00 | | 100.0 | | 129.0 | 124.0 | 10.0 | 9.5 | 3.5 | 83.45 | 349000 | 81400 |
| 1100 | 110 | 106.0 | | 4.15 | | 6.0 | 2.00 | 4.00 | | 103.0 | | 131.2 | 127.0 | 10.1 | 9.6 | 3.5 | 75.24 | 356000 | 82900 |
| 1150 | 115 | 111.0 | | 4.15 | | 6.0 | 2.00 | 4.00 | | 108.0 | | 137.3 | 133.0 | 10.6 | 9.8 | 3.5 | 78.65 | 327000 | 86700 |
| 1200 | 120 | 116.0 | | 4.15 | | 6.0 | 2.00 | 4.00 | | 113.0 | | 143.1 | 138.0 | 11.0 | 10.2 | 3.5 | 85.58 | 388000 | 90500 |
| 1250 | 125 | 121.0 | | 4.15 | | 6.0 | 2.00 | 4.00 | | 118.0 | | 149.0 | 144.0 | 11.4 | 10.4 | 4.0 | 99.62 | 404000 | 94200 |
| 1300 | 130 | 126.0 | | 4.15 | | 6.0 | 2.00 | 4.00 | | 123.0 | | 154.4 | 150.0 | 11.6 | 10.7 | 4.0 | 98.10 | 421000 | 98000 |
| 1350 | 135 | 131.0 | | 4.15 | | 6.0 | 2.00 | 4.00 | | 128.0 | | 159.8 | 155.0 | 11.8 | 11.0 | 4.0 | 113.40 | 437000 | 102000 |
| 1400 | 140 | 136.0 | | 4.15 | | 6.0 | 2.00 | 4.00 | +0.00 −0.10 | 133.0 | | 165.2 | 160.0 | 12.0 | 11.2 | 4.0 | 119.18 | 453000 | 106000 |
| 1450 | 145 | 141.0 | | 4.15 | | 6.0 | 2.00 | 4.00 | | 138.0 | | 170.6 | 166.0 | 12.2 | 11.5 | 4.0 | 128.53 | 470000 | 109000 |
| 1500 | 150 | 145.0 | +0.00 −0.63 | 4.15 | | 7.5 | 2.50 | 4.00 | | 142.0 | | 177.3 | 171.0 | 13.0 | 11.8 | 4.0 | 132.80 | 485000 | 141000 |
| 1550 | 155 | 150.0 | | 4.15 | +0.18 −0.00 | 7.5 | 2.50 | 4.00 | | 146.0 | +0.63 −1.50 | 182.3 | 176.0 | 13.0 | 12.0 | 4.0 | 136.06 | 501000 | 146000 |
| 1600 | 160 | 155.0 | | 4.15 | | 7.5 | 2.50 | 4.00 | | 151.0 | | 188.0 | 182.0 | 13.3 | 12.2 | 4.0 | 137.50 | 518000 | 151000 |
| 1650 | 165 | 160.0 | | 4.15 | | 7.5 | 2.50 | 4.00 | | 155.5 | | 193.4 | 187.0 | 13.5 | 12.5 | 4.0 | 151.96 | 534000 | 156000 |
| 1700 | 170 | 165.0 | | 4.15 | | 7.5 | 2.50 | 4.00 | | 160.5 | | 198.4 | 192.0 | 13.5 | 12.9 | 4.0 | 169.00 | 550000 | 160000 |
| 1750 | 175 | 170.0 | | 4.15 | | 7.5 | 2.50 | 4.00 | | 165.5 | | 203.4 | 197.0 | 13.5 | 12.9 | 4.0 | 173.70 | 566000 | 165000 |
| 1800 | 180 | 175.0 | | 4.15 | | 7.5 | 2.50 | 4.00 | | 170.5 | | 210.0 | 204.0 | 14.2 | 13.5 | 4.0 | 188.00 | 582000 | 170000 |
| 1850 | 185 | 180.0 | | 4.15 | | 7.5 | 2.50 | 4.00 | | 175.5 | | 215.2 | 209.0 | 14.3 | 13.5 | 4.0 | 193.00 | 598000 | 174000 |
| 1900 | 190 | 185.0 | | 4.15 | | 7.5 | 2.50 | 4.00 | | 180.5 | | 220.0 | 214.0 | 14.2 | 14.0 | 4.0 | 203.00 | 615000 | 179000 |
| 1950 | 195 | 190.0 | | 4.15 | | 7.5 | 2.50 | 4.00 | | 185.5 | | 225.0 | 219.0 | 14.2 | 14.0 | 4.0 | 209.50 | 631000 | 184000 |
| 2000 | 200 | 195.0 | | 4.15 | | 7.5 | 2.50 | 4.00 | | 190.5 | | 230.0 | 224.0 | 14.2 | 14.0 | 4.0 | 214.00 | 647000 | 188000 |
| 2050 | 205 | 199.0 | +0.00 −0.72 | 5.15 | | 9.0 | 3.00 | 5.00 | | 193.0 | | 235.0 | 228.0 | 14.2 | 14.0 | 4.0 | 278.00 | 721000 | 232000 |
| 2100 | 210 | 204.0 | | 5.15 | | 9.0 | 3.00 | 5.00 | | 198.0 | +0.72 −1.70 | 240.0 | 233.0 | 14.2 | 14.0 | 4.0 | 285.00 | 739000 | 238000 |
| 2200 | 220 | 214.0 | | 5.15 | | 9.0 | 3.00 | 5.00 | | 208.0 | | 250.0 | 243.0 | 14.2 | 14.0 | 4.0 | 298.50 | 775000 | 249000 |
| 2300 | 230 | 224.0 | | 5.15 | | 9.0 | 3.00 | 5.00 | +0.00 −0.12 | 218.0 | | 260.0 | 253.0 | 14.2 | 14.0 | 4.0 | 312.00 | 809000 | 260000 |
| 2400 | 240 | 234.0 | | 5.15 | | 9.0 | 3.00 | 5.00 | | 228.0 | | 270.0 | 263.0 | 14.2 | 14.0 | 4.0 | 326.00 | 844000 | 271000 |
| 2500 | 250 | 244.0 | | 5.15 | | 9.0 | 3.00 | 5.00 | | 238.0 | | 280.0 | 272.0 | 14.2 | 14.0 | 4.0 | 340.00 | 880000 | 283000 |
| 2600 | 260 | 252.0 | | 5.15 | | 12.0 | 4.00 | 5.00 | | 245.0 | | 294.0 | 285.0 | 16.2 | 16.0 | 5.0 | 414.00 | 915000 | 392000 |
| 2700 | 270 | 262.0 | | 5.15 | | 12.0 | 4.00 | 5.00 | | 255.0 | | 304.0 | 295.0 | 16.2 | 16.0 | 5.0 | 430.50 | 950000 | 407000 |
| 2800 | 280 | 272.0 | +0.00 −0.81 | 5.15 | | 12.0 | 4.00 | 5.00 | | 265.0 | +0.81 −2.00 | 314.0 | 305.0 | 16.2 | 16.0 | 5.0 | 446.50 | 985000 | 422000 |
| 2900 | 290 | 282.0 | | 5.15 | | 12.0 | 4.00 | 5.00 | | 275.0 | | 324.0 | 315.0 | 16.2 | 16.0 | 5.0 | 463.00 | 1020000 | 437000 |
| 3000 | 300 | 292.0 | | 5.15 | | 12.0 | 4.00 | 5.00 | | 285.0 | | 334.0 | 325.0 | 16.2 | 16.0 | 5.0 | 479.00 | 1056000 | 452000 |
| 3100 | 310 | 300.0 | | 6.20 | | 15.0 | 5.00 | 6.00 | | 293.0 | | 352.2 | 341.0 | 20.2 | 20.0 | 6.0 | 710.50 | 1309000 | 584000 |
| 3200 | 320 | 310.0 | | 6.20 | | 15.0 | 5.00 | 6.00 | | 303.0 | | 362.2 | 351.1 | 20.2 | 20.0 | 6.0 | 734.00 | 1351000 | 603000 |
| 3300 | 330 | 320.0 | | 6.20 | | 15.0 | 5.00 | 6.00 | | 313.0 | | 372.2 | 361.0 | 20.2 | 20.0 | 6.0 | 757.00 | 1393000 | 622000 |
| 3400 | 340 | 330.0 | | 6.20 | | 15.0 | 5.00 | 6.00 | | 323.0 | | 382.2 | 371.0 | 20.2 | 20.0 | 6.0 | 780.00 | 1436000 | 641000 |
| 3500 | 350 | 340.0 | | 6.20 | +0.22 −0.00 | 15.0 | 5.00 | 6.00 | +0.00 −0.18 | 333.0 | +1.00 −2.50 | 392.2 | 381.0 | 20.2 | 20.0 | 6.0 | 805.00 | 1478000 | 660000 |
| 3600 | 360 | 350.0 | +0.00 −0.89 | 6.20 | | 15.0 | 5.00 | 6.00 | | 343.0 | | 402.2 | 391.0 | 20.2 | 20.0 | 6.0 | 827.00 | 1520000 | 679000 |
| 3700 | 370 | 360.0 | | 6.20 | | 15.0 | 5.00 | 6.00 | | 353.0 | | 412.2 | 401.0 | 20.2 | 20.0 | 6.0 | 850.00 | 1562000 | 697000 |
| 3800 | 380 | 370.0 | | 6.20 | | 15.0 | 5.00 | 6.00 | | 363.0 | | 422.2 | 411.0 | 20.2 | 20.0 | 6.0 | 873.00 | 1604000 | 716000 |
| 3900 | 390 | 380.0 | | 6.20 | | 15.0 | 5.00 | 6.00 | | 373.0 | | 432.2 | 421.0 | 20.2 | 20.0 | 6.0 | 896.00 | 1646000 | 735000 |
| 4000 | 400 | 390.0 | | 6.20 | | 15.0 | 5.00 | 6.00 | | 383.0 | | 442.2 | 431.0 | 20.2 | 20.0 | 6.0 | 919.00 | 1689000 | 754000 |

## Competitors Equivalents

| Anderton | Seeger | Waldes/Salter | Anderton | Seeger | Waldes/Salter | Anderton | Seeger | Waldes/Salter |
|---|---|---|---|---|---|---|---|---|
| A0500 | – | – | D1400 | DIN471 (A) | 7100* | N1500 | – | 5133 |
| A0600 | – | – | N1400 | – | 5100 | A1500U,C&S | – | 2025, 2021, 2026* |
| A0700 | – | – | B1400 | AZ | 6100* | N1501 | – | 5131 |
| A0900 | – | – | M1408 | AV | – | N1540 | – | 5144 |
| A1000 | – | – | N1408 | – | 5108 | M1700 | – | – |
| A1100 | – | – | M1440 | G | – | M1800 | H | – |
| A1200 | – | – | N1440 | – | 5555 | N1800 | – | 5103 |
| D1300 | DIN472 (J) | 7000* | D1460 | DIN471 (AS) | – | D2000 | DIN984 (JK) | – |
| N1300 | – | N5000 | N1460 | – | 5160 | D2100 | DIN983 (AK) | – |
| B1300 | JZ | 6000* | M1465 | – | 7115* | M2300 | SB | – |
| N1302 | – | N5002 | N1465 | – | 5115 | M2400 | SW | – |
| N1305 | – | 5005 | B1500 | – | 6133* | M2500 | – | – |
| M1308 | JV | – | D1500 | DIN6799 (RS) | 7133* | M3200 | DIN5417 (SP) | – |
| N1308 | – | 5008 | | | | | | |

*Salter only

All dimensions in inches

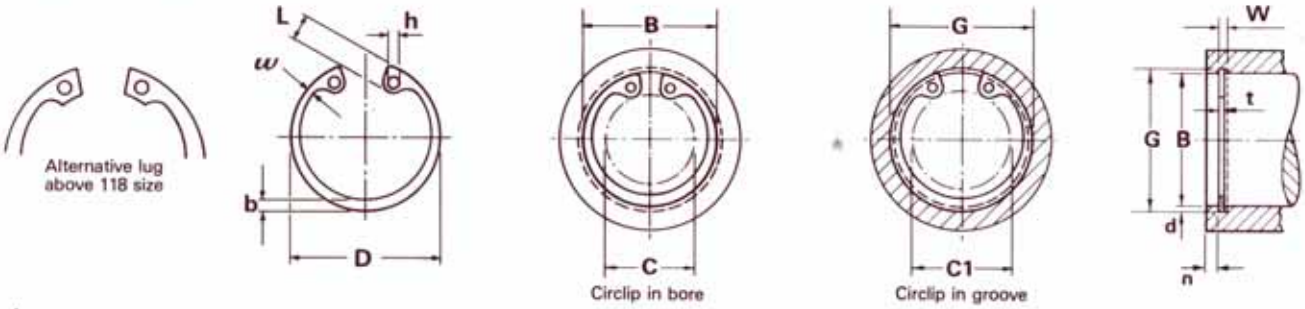


† Thrust load calculations see pages 9 & 10

* These circlips should not be used as direct substitutes for British Standard Imperial sizes

| SIZE CODE | Bore (B) B (frac) | Bore (B) B (dec) | Groove (G) G | Tol. | W | Tol. | n (min) | d ~ | Circlip (F) t | Tol. | D | Tol. | C | C1 | L (max) | b ~ | w ~ | h (min) | Wt. (lb/k) | Tc† (lb.f) | Tg† (lb.f) |
|---|---|---|---|---|---|---|---|---|---|---|---|---|---|---|---|---|---|---|---|---|---|
| 0025 | 1/4 | .250 | .268 | ±.001 | .018 | +.002 −.000 | .027 | .009 | .015 | ±.002 | .280 | +.010 −.005 | .11 | .13 | .068 | .025 | .015 | .029 | 0.08 | 530 | 130 |
| 0031 | 5/16 | .312 | .330 | | .018 | | .027 | .009 | .015 | | .346 | | .17 | .19 | .069 | .033 | .018 | .029 | 0.11 | 660 | 160 |
| 0037 | 3/8 | .375 | .397 | ±.002 | .029 | +.003 −.000 | .033 | .011 | .025 | | .415 | | .20 | .22 | .085 | .040 | .028 | .039 | 0.25 | 1320 | 235 |
| 0043 | 7/16 | .438 | .461 | | .029 | | .036 | .012 | .025 | | .482 | | .23 | .25 | .101 | .049 | .029 | .039 | 0.37 | 1550 | 285 |
| 0045 | 29/64 | .453 | .477 | | .029 | | .036 | .012 | .025 | | .498 | | .25 | .27 | .101 | .050 | .030 | .045 | 0.43 | 1600 | 310 |
| 0050 | 1/2 | .500 | .530 | | .039 | | .045 | .015 | .035 | | .548 | | .26 | .29 | .117 | .053 | .035 | .045 | 0.70 | 2470 | 425 |
| 0051 | — | .512 | .542 | | .039 | | .045 | .015 | .035 | | .560 | | .27 | .30 | .119 | .053 | .035 | .045 | 0.77 | 2530 | 435 |
| 0056 | 9/16 | .562 | .596 | | .039 | | .051 | .017 | .035 | | .620 | | .28 | .32 | .137 | .053 | .035 | .045 | 0.86 | 2780 | 540 |
| 0062 | 5/8 | .625 | .665 | | .039 | | .060 | .020 | .035 | | .694 | | .35 | .39 | .137 | .060 | .035 | .060 | 1.0 | 3090 | 705 |
| 0068 | 11/16 | .688 | .732 | | .039 | | .066 | .022 | .035 | | .763 | | .41 | .45 | .137 | .063 | .036 | .060 | 1.2 | 3400 | 855 |
| 0075 | 3/4 | .750 | .796 | | .039 | | .069 | .023 | .035 | | .831 | | .45 | .50 | .147 | .070 | .040 | .060 | 1.3 | 3710 | 975 |
| 0077 | — | .777 | .825 | ±.003 | .046 | | .072 | .024 | .042 | | .859 | | .47 | .52 | .151 | .074 | .044 | .060 | 1.7 | 4610 | 1050 |
| 0081 | 13/16 | .812 | .862 | | .046 | | .075 | .025 | .042 | | .901 | +.015 −.010 | .49 | .53 | .160 | .077 | .044 | .060 | 1.9 | 4820 | 1150 |
| 0086 | — | .866 | .920 | | .046 | | .081 | .027 | .042 | | .961 | | .54 | .59 | .160 | .081 | .045 | .060 | 2.0 | 5140 | 1320 |
| 0087 | 7/8 | .875 | .931 | | .046 | | .084 | .028 | .042 | | .971 | | .55 | .60 | .160 | .084 | .045 | .060 | 2.1 | 5190 | 1390 |
| 0090 | — | .901 | .959 | | .046 | | .087 | .029 | .042 | | 1.000 | | .58 | .63 | .160 | .087 | .047 | .060 | 2.2 | 5350 | 1480 |
| 0093 | 15/16 | .938 | 1.000 | | .046 | | .093 | .031 | .042 | | 1.041 | | .61 | .67 | .160 | .091 | .050 | .060 | 2.4 | 5570 | 1640 |
| 0100 | 1 | 1.000 | 1.066 | | .046 | | .099 | .033 | .042 | | 1.111 | | .68 | .74 | .160 | .104 | .052 | .060 | 2.7 | 5940 | 1870 |
| 0102 | — | 1.023 | 1.091 | | .046 | | .102 | .034 | .042 | | 1.136 | | .70 | .76 | .160 | .106 | .054 | .060 | 2.8 | 6070 | 1970 |
| 0106 | 1.1/16 | 1.062 | 1.130 | | .056 | | .102 | .034 | .050 | | 1.180 | | .69 | .75 | .185 | .110 | .055 | .076 | 3.7 | 7500 | 2040 |
| 0112 | 1.1/8 | 1.125 | 1.197 | | .056 | | .108 | .036 | .050 | | 1.249 | | .75 | .82 | .185 | .116 | .057 | .076 | 4.0 | 7950 | 2290 |
| 0118 | 1.3/16 | 1.188 | 1.262 | | .056 | | .111 | .037 | .050 | | 1.319 | | .81 | .88 | .185 | .120 | .058 | .076 | 4.3 | 8400 | 2490 |
| 0125 | 1.1/4 | 1.250 | 1.330 | | .056 | | .120 | .040 | .050 | | 1.388 | +.025 −.020 | .88 | .95 | .185 | .124 | .062 | .076 | 4.8 | 8850 | 2830 |
| 0131 | 1.5/16 | 1.312 | 1.396 | ±.004 | .056 | | .126 | .042 | .050 | | 1.456 | | .94 | 1.02 | .185 | .130 | .062 | .076 | 5.0 | 9300 | 3120 |
| 0137 | 1.3/8 | 1.375 | 1.461 | | .056 | | .129 | .043 | .050 | | 1.526 | | 1.00 | 1.08 | .185 | .130 | .063 | .076 | 5.1 | 9700 | 3340 |
| 0143 | 1.7/16 | 1.438 | 1.528 | | .056 | | .135 | .045 | .050 | | 1.596 | | 1.06 | 1.15 | .185 | .133 | .065 | .076 | 5.8 | 10200 | 3660 |
| 0145 | — | 1.456 | 1.548 | | .056 | | .138 | .046 | .050 | | 1.616 | | 1.08 | 1.17 | .185 | .133 | .065 | .076 | 6.0 | 10300 | 3790 |
| 0150 | 1.1/2 | 1.500 | 1.594 | | .056 | +.004 −.000 | .141 | .047 | .050 | | 1.660 | | 1.13 | 1.22 | .185 | .133 | .066 | .076 | 6.1 | 10600 | 3990 |
| 0156 | 1.9/16 | 1.562 | 1.658 | | .068 | | .144 | .048 | .062 | | 1.734 | | 1.15 | 1.24 | .205 | .160 | .079 | .076 | 9.1 | 11400 | 4240 |
| 0162 | 1.5/8 | 1.625 | 1.725 | | .068 | | .150 | .050 | .062 | | 1.804 | | 1.21 | 1.31 | .205 | .160 | .080 | .076 | 10.1 | 11800 | 4590 |
| 0165 | — | 1.653 | 1.755 | | .068 | | .153 | .051 | .062 | | 1.835 | | 1.24 | 1.34 | .205 | .167 | .083 | .076 | 10.4 | 12100 | 4760 |
| 0168 | 1.11/16 | 1.688 | 1.792 | | .068 | | .156 | .052 | .062 | | 1.874 | | 1.27 | 1.38 | .205 | .170 | .085 | .076 | 10.8 | 12300 | 4960 |
| 0175 | 1.3/4 | 1.750 | 1.858 | ±.005 | .068 | | .162 | .054 | .062 | | 1.942 | +.035 −.025 | 1.34 | 1.44 | .205 | .175 | .082 | .076 | 11.5 | 12800 | 5340 |
| 0181 | 1.13/16 | 1.812 | 1.922 | | .068 | | .165 | .055 | .062 | | 2.012 | | 1.40 | 1.51 | .205 | .170 | .084 | .091 | 12.0 | 13200 | 5630 |
| 0185 | — | 1.850 | 1.962 | | .068 | | .168 | .056 | .062 | | 2.054 | | 1.44 | 1.55 | .205 | .170 | .085 | .091 | 12.8 | 13500 | 5860 |
| 0187 | 1.7/8 | 1.875 | 1.989 | | .068 | | .171 | .057 | .062 | | 2.072 | | 1.46 | 1.58 | .205 | .170 | .085 | .091 | 12.8 | 13700 | 6040 |
| 0193 | 1.15/16 | 1.938 | 2.056 | | .068 | | .177 | .059 | .062 | | 2.141 | | 1.52 | 1.64 | .205 | .165 | .079 | .091 | 13.3 | 14100 | 6470 |
| 0200 | 2 | 2.000 | 2.122 | | .068 | | .183 | .061 | .062 | | 2.210 | | 1.59 | 1.71 | .205 | .170 | .085 | .091 | 13.0 | 14600 | 6900 |
| 0206 | 2.1/16 | 2.062 | 2.186 | | .086 | | .186 | .062 | .078 | | 2.280 | | 1.61 | 1.73 | .225 | .186 | .091 | .091 | 18.0 | 18900 | 7230 |
| 0212 | 2.1/8 | 2.125 | 2.251 | | .086 | | .189 | .063 | .078 | | 2.350 | | 1.65 | 1.78 | .236 | .195 | .096 | .091 | 19.4 | 19500 | 7570 |
| 0218 | 2.3/16 | 2.188 | 2.318 | | .086 | | .195 | .065 | .078 | | 2.415 | | 1.71 | 1.84 | .236 | .199 | .098 | .091 | 19.6 | 20000 | 8040 |
| 0225 | 2.1/4 | 2.250 | 2.382 | | .086 | | .198 | .066 | .078 | | 2.490 | | 1.77 | 1.91 | .236 | .203 | .107 | .091 | 21.8 | 20600 | 8400 |
| 0231 | 2.5/16 | 2.312 | 2.450 | | .086 | | .207 | .069 | .078 | | 2.560 | | 1.84 | 1.98 | .236 | .205 | .106 | .091 | 22.6 | 21200 | 9020 |
| 0237 | 2.3/8 | 2.375 | 2.517 | | .086 | | .213 | .071 | .078 | | 2.630 | | 1.90 | 2.04 | .236 | .207 | .108 | .091 | 23.8 | 21700 | 9540 |
| 0244 | 2.7/16 | 2.440 | 2.584 | | .086 | | .216 | .072 | .078 | | 2.702 | +.040 −.030 | 1.96 | 2.11 | .236 | .205 | .104 | .108 | 25.3 | 22300 | 10100 |
| 0250 | 2.1/2 | 2.500 | 2.648 | | .086 | | .222 | .074 | .078 | ±.003 | 2.775 | | 2.02 | 2.17 | .236 | .210 | .103 | .108 | 29.3 | 22900 | 13000 |
| 0256 | 2.9/16 | 2.562 | 2.714 | | .103 | | .228 | .076 | .093 | | 2.844 | | 2.02 | 2.18 | .268 | .222 | .109 | .108 | 30.4 | 28000 | 11000 |
| 0262 | 2.5/8 | 2.625 | 2.781 | | .103 | | .234 | .078 | .093 | | 2.910 | | 2.08 | 2.24 | .268 | .226 | .118 | .108 | 34.5 | 28600 | 11600 |
| 0268 | 2.11/16 | 2.688 | 2.848 | | .103 | | .240 | .080 | .093 | | 2.980 | | 2.15 | 2.31 | .268 | .236 | .122 | .108 | 36.2 | 29300 | 12200 |
| 0275 | 2.3/4 | 2.750 | 2.914 | | .103 | | .246 | .082 | .093 | | 3.050 | | 2.18 | 2.34 | .284 | .234 | .114 | .108 | 35.5 | 30000 | 12800 |
| 0281 | 2.13/16 | 2.812 | 2.980 | | .103 | +.005 −.000 | .252 | .084 | .093 | | 3.121 | | 2.24 | 2.40 | .284 | .230 | .115 | .108 | 39.2 | 30800 | 13400 |
| 0287 | 2.7/8 | 2.875 | 3.051 | ±.006 | .103 | | .264 | .088 | .093 | | 3.191 | | 2.30 | 2.47 | .284 | .240 | .125 | .108 | 41.0 | 31500 | 14300 |
| 0300 | 3 | 3.000 | 3.182 | | .103 | | .273 | .091 | .093 | | 3.325 | | 2.43 | 2.60 | .284 | .250 | .124 | .108 | 42.5 | 32900 | 15400 |
| 0306 | 3.1/16 | 3.062 | 3.248 | | .120 | | .279 | .093 | .109 | | 3.418 | | 2.46 | 2.64 | .299 | .254 | .126 | .123 | 54.4 | 39300 | 16100 |
| 0312 | 3.1/8 | 3.125 | 3.315 | | .120 | | .285 | .095 | .109 | | 3.488 | | 2.52 | 2.71 | .299 | .260 | .129 | .123 | 56.0 | 40100 | 16800 |
| 0315 | — | 3.149 | 3.348 | | .120 | | .288 | .096 | .109 | | 3.523 | | 2.55 | 2.74 | .299 | .260 | .129 | .123 | 57.1 | 40400 | 17100 |
| 0325 | 3.1/4 | 3.250 | 3.446 | | .120 | | .294 | .098 | .109 | | 3.623 | | 2.65 | 2.84 | .299 | .269 | .135 | .123 | 59.9 | 41700 | 18000 |
| 0334 | 3.11/32 | 3.346 | 3.546 | | .120 | | .300 | .100 | .109 | | 3.734 | ±.055 | 2.69 | 2.89 | .323 | .276 | .140 | .123 | 63.0 | 43000 | 18900 |
| 0347 | 3.15/32 | 3.469 | 3.675 | | .120 | | .309 | .103 | .109 | | 3.857 | | 2.77 | 2.96 | .350 | .294 | .143 | .123 | 69.0 | 44500 | 20200 |
| 0350 | 3.1/2 | 3.500 | 3.710 | | .120 | | .315 | .105 | .109 | | 3.890 | | 2.80 | 2.90 | .350 | .294 | .143 | .123 | 71.0 | 44900 | 20800 |
| 0354 | — | 3.543 | 3.776 | | .120 | | .321 | .107 | .109 | | 3.936 | | 2.84 | 3.07 | .350 | .292 | .142 | .123 | 72.1 | 45500 | 21400 |
| 0362 | 3.5/8 | 3.625 | 3.841 | | .120 | | .324 | .108 | .109 | | 4.024 | | 2.92 | 3.13 | .350 | .298 | .149 | .123 | 73.0 | 46500 | 22100 |
| 0375 | 3.3/4 | 3.750 | 3.974 | | .120 | | .336 | .112 | .109 | | 4.157 | | 3.04 | 3.26 | .350 | .309 | .155 | .123 | 78.0 | 48200 | 23700 |
| 0387 | 3.7/8 | 3.875 | 4.107 | | .120 | | .348 | .116 | .109 | | 4.291 | ±.065 | 3.17 | 3.40 | .350 | .312 | .165 | .123 | 87.1 | 49800 | 25400 |
| 0393 | 3.15/16 | 3.938 | 4.174 | | .120 | | .354 | .118 | .109 | | 4.358 | | 3.23 | 3.46 | .350 | .319 | .166 | .123 | 87.9 | 50600 | 26300 |

Standard material - carbon spring steel. Standard finish - phosphate and oil.

# STANDARD INTERNAL CIRCLIPS AMERICAN SPECIFICATIONS *
## N1300 (Continued)

Equivalent to MIL-R-21248/MS 16625

| SIZE CODE | Bore (B) B (frac) | Bore (B) B (dec) | Groove (G) G | Tol. | W | Tol. | n (min) | d | Circlip (F) t | Tol. | D | Tol. | C | C1 | L (max) | b ~ | ω ~ | h (min) | Wt. (lb/k) | Tc† (lb.f) | Tg† (lb.f) |
|---|---|---|---|---|---|---|---|---|---|---|---|---|---|---|---|---|---|---|---|---|---|
| 0400 | 4 | 4.000 | 4.240 | ±.006 | .120 | +.005 −.000 | .360 | .120 | .109 | ±.003 | 4.424 | ±.065 | 3.24 | 3.47 | .378 | .330 | .166 | .123 | 95.0 | 51400 | 27100 |
| 0412 | 4.1/8 | 4.125 | 4.365 | | .120 | | .360 | .120 | .109 | | 4.558 | | 3.36 | 3.60 | .378 | .330 | .171 | .123 | 97.0 | 53000 | 28000 |
| 0425 | 4.1/4 | 4.250 | 4.490 | | .120 | | .360 | .120 | .109 | | 4.691 | | 3.49 | 3.72 | .378 | .335 | .180 | .123 | 100 | 54600 | 28800 |
| 0433 | — | 4.331 | 4.571 | | .120 | | .360 | .120 | .109 | | 4.756 | | 3.50 | 3.73 | .413 | .345 | .180 | .151 | 107 | 55600 | 29400 |
| 0450 | 4.1/2 | 4.500 | 4.740 | | .120 | | .360 | .120 | .109 | | 4.940 | | 3.67 | 3.90 | .413 | .351 | .181 | .151 | 111 | 57800 | 30500 |
| 0462 | 4.5/8 | 4.625 | 4.865 | | .120 | +.006 −.000 | .360 | .120 | .109 | ±.004 | 5.076 | | 3.79 | 4.03 | .413 | .360 | .185 | .151 | 119 | 59400 | 31400 |
| 0475 | 4.3/4 | 4.750 | 4.995 | | .120 | | .366 | .122 | .109 | | 5.213 | | 3.92 | 4.16 | .413 | .370 | .175 | .151 | 124 | 61000 | 32800 |
| 0500 | 5 | 5.000 | 5.260 | | .120 | | .390 | .130 | .109 | | 5.485 | | 4.10 | 4.36 | .445 | .395 | .218 | .151 | 136 | 64200 | 36800 |
| 0525 | 5.1/4 | 5.250 | 5.520 | ±.007 | .139 | | .405 | .135 | .125 | | 5.770 | | 4.31 | 4.58 | .465 | .408 | .212 | .151 | 175 | 77300 | 40100 |
| 0537 | 5.3/8 | 5.375 | 5.650 | | .139 | | .405 | .135 | .125 | | 5.910 | | 4.44 | 4.71 | .465 | .408 | .198 | .151 | 179 | 78800 | 41000 |
| 0550 | 5.1/2 | 5.500 | 5.770 | | .139 | | .405 | .135 | .125 | | 6.066 | | 4.56 | 4.83 | .465 | .408 | .200 | .151 | 189 | 81000 | 42000 |
| 0575 | 5.3/4 | 5.750 | 6.020 | | .139 | | .405 | .135 | .125 | | 6.336 | | 4.81 | 5.08 | .465 | .408 | .198 | .151 | 195 | 84700 | 43900 |
| 0600 | 6 | 6.000 | 6.270 | | .139 | | .405 | .135 | .125 | | 6.620 | | 5.06 | 5.33 | .465 | .416 | .223 | .151 | 204 | 88400 | 45800 |
| 0625 | 6.1/4 | 6.250 | 6.530 | | .174 | | .420 | .140 | .156 | | 6.895 | ±.080 | 5.34 | 5.61 | .454 | .441 | .213 | .182 | 263 | 114900 | 49500 |
| 0650 | 6.1/2 | 6.500 | 6.790 | | .174 | | .435 | .145 | .156 | | 7.170 | | 5.59 | 5.87 | .454 | .441 | .244 | .182 | 281 | 119500 | 53300 |
| 0662 | 6.5/8 | 6.625 | 6.925 | | .174 | | .450 | .150 | .156 | | 7.308 | | 5.71 | 6.01 | .454 | .441 | .220 | .182 | 300 | 121700 | 56200 |
| 0675 | 6.3/4 | 6.750 | 7.055 | | .174 | | .456 | .152 | .156 | | 7.445 | | 5.73 | 6.03 | .508 | .456 | .224 | .182 | 325 | 124000 | 58000 |
| 0700 | 7 | 7.000 | 7.315 | | .174 | | .471 | .157 | .156 | | 7.720 | | 5.91 | 6.22 | .540 | .485 | .258 | .182 | 344 | 128600 | 62200 |
| 0725 | 7.1/4 | 7.250 | 7.575 | | .209 | | .486 | .162 | .187 | | 7.995 | | 6.10 | 6.42 | .570 | .490 | .238 | .182 | 428 | 159700 | 66400 |
| 0750 | 7.1/2 | 7.500 | 7.840 | | .209 | | .510 | .170 | .187 | | 8.270 | | 6.35 | 6.69 | .570 | .507 | .282 | .182 | 476 | 165200 | 72100 |
| 0775 | 7.3/4 | 7.750 | 8.100 | ±.008 | .209 | +.008 −.000 | .525 | .175 | .187 | ±.005 | 8.545 | | 6.62 | 6.97 | .560 | .500 | .241 | .182 | 570 | 170700 | 76700 |
| 0800 | 8 | 8.000 | 8.360 | | .209 | | .540 | .180 | .187 | | 8.820 | | 6.79 | 7.15 | .600 | .550 | .280 | .182 | 585 | 152700 | 81400 |
| 0825 | 8.1/4 | 8.250 | 8.620 | | .209 | | .555 | .185 | .187 | | 9.095 | | 7.04 | 7.41 | .600 | .548 | .260 | .182 | 603 | 157500 | 86300 |
| 0850 | 8.1/2 | 8.500 | 8.880 | | .209 | | .570 | .190 | .187 | | 9.285 | ±.090 | 7.23 | 7.60 | .632 | .573 | .277 | .182 | 634 | 162300 | 91300 |
| 0875 | 8.3/4 | 8.750 | 9.145 | | .209 | | .591 | .197 | .187 | | 9.558 | | 7.48 | 7.88 | .632 | .576 | .283 | .182 | 653 | 167000 | 97700 |
| 0900 | 9 | 9.000 | 9.405 | | .209 | | .606 | .202 | .187 | | 9.830 | | 7.73 | 8.13 | .632 | .592 | .294 | .182 | 732 | 171800 | 103000 |
| 0925 | 9.1/4 | 9.250 | 9.668 | | .209 | | .627 | .209 | .187 | | 10.102 | | 7.98 | 8.39 | .632 | .622 | .299 | .182 | 767 | 176600 | 109000 |
| 0950 | 9.1/2 | 9.500 | 9.930 | | .209 | | .645 | .215 | .187 | | 10.375 | | 8.23 | 8.65 | .632 | .622 | .354 | .182 | 803 | 181400 | 116000 |
| 0975 | 9.3/4 | 9.750 | 10.190 | | .209 | | .660 | .220 | .187 | | 10.648 | | 8.50 | 8.93 | NO LUG | .622 | .295 | .182 | 833 | 186200 | 121300 |
| 1000 | 10 | 10.000 | 10.450 | | .209 | | .675 | .225 | .187 | | 10.920 | | 8.75 | 9.19 | | .622 | .295 | .182 | 863 | 191000 | 127200 |

# STANDARD EXTERNAL CIRCLIPS AMERICAN SPECIFICATIONS *
## N1400

Equivalent to MIL-R-21248/MS 16624

All dimensions in inches

* These circlips should not be used as direct substitutes for British Standard Imperial sizes

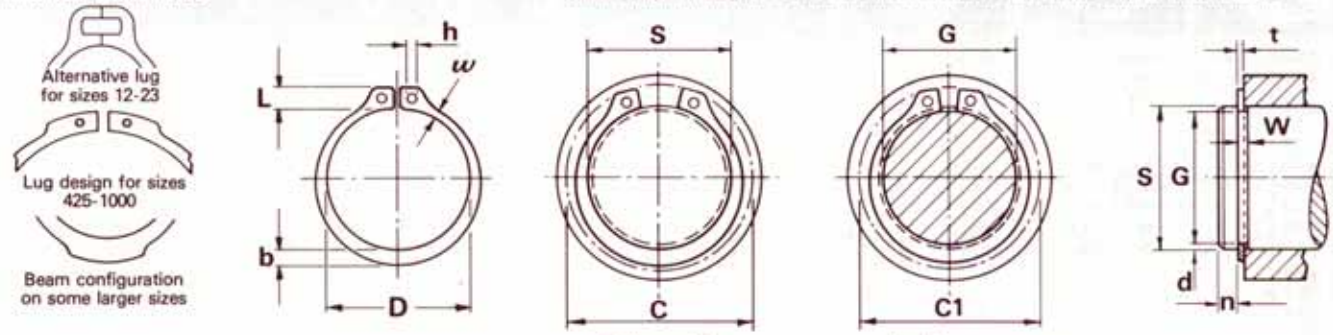


Circlip on shaft

Circlip in groove

*Sizes 12-23 Beryllium copper only

† Thrust load calculations see pages 9 & 10

| SIZE CODE | Shaft (S) S (frac) | Shaft (S) S (dec) | Groove (G) G | Tol. | W | Tol. | n (min) | d ~ | Circlip (F) t | Tol. | D | Tol. | C | C1 | L (max) | b ~ | ω ~ | h (min) | Wt. (lb/k) | Tc† (lb.f) | Tg† (lb.f) |
|---|---|---|---|---|---|---|---|---|---|---|---|---|---|---|---|---|---|---|---|---|---|
| *0012 | 1/8 | .125 | .117 | ±.0015 | .012 | +.002 −.000 | .014 | .004 | .010 | ±.001 | .112 | +.002 −.004 | .22 | .214 | .048 | .018 | .011 | .024 | 0.018 | 110 | 28 |
| *0015 | 5/32 | .156 | .146 | | .012 | | .017 | .005 | .010 | | .142 | | .27 | .260 | .056 | .026 | .016 | .024 | 0.037 | 130 | 44 |
| *0018 | 3/16 | .188 | .175 | | .018 | | .022 | .007 | .015 | ±.002 | .168 | | .30 | .286 | .052 | .025 | .016 | .023 | 0.059 | 240 | 69 |
| *0019 | — | .197 | .185 | | .018 | | .020 | .006 | .015 | | .179 | | .32 | .307 | .058 | .026 | .016 | .024 | 0.063 | 250 | 67 |
| *0021 | 7/32 | .219 | .205 | | .018 | | .023 | .007 | .015 | | .196 | | .34 | .324 | .058 | .028 | .017 | .024 | 0.074 | 280 | 87 |
| *0023 | 15/64 | .236 | .222 | ±.002 | .018 | +.003 −.000 | .023 | .007 | .015 | | .215 | | .36 | .341 | .058 | .030 | .019 | .024 | 0.086 | 310 | 93 |
| 0025 | 1/4 | .250 | .230 | | .029 | | .032 | .010 | .025 | | .225 | | .45 | .43 | .083 | .035 | .025 | .039 | 0.21 | 880 | 141 |
| 0027 | — | .276 | .255 | | .029 | | .035 | .010 | .025 | | .250 | | .48 | .46 | .084 | .035 | .024 | .039 | 0.25 | 980 | 164 |
| 0028 | 9/32 | .281 | .261 | | .029 | | .033 | .010 | .025 | ±.002 | .256 | | .49 | .47 | .083 | .038 | .025 | .039 | 0.24 | 990 | 160 |
| 0031 | 5/16 | .312 | .290 | | .029 | | .036 | .011 | .025 | | .281 | +.002 −.005 | .54 | .52 | .090 | .040 | .026 | .039 | 0.27 | 1100 | 194 |
| 0034 | 11/32 | .344 | .321 | | .029 | | .038 | .012 | .025 | | .309 | | .57 | .55 | .090 | .042 | .026 | .039 | 0.31 | 1210 | 224 |
| 0035 | — | .354 | .330 | | .029 | | .038 | .012 | .025 | | .320 | | .59 | .57 | .090 | .046 | .029 | .039 | 0.35 | 1250 | 240 |
| 0037 | 3/8 | .375 | .352 | | .029 | | .038 | .012 | .025 | | .338 | | .61 | .59 | .091 | .050 | .030 | .039 | 0.39 | 1320 | 244 |
| 0039 | — | .394 | .369 | | .029 | | .041 | .013 | .025 | | .354 | | .62 | .60 | .090 | .052 | .031 | .039 | 0.42 | 1390 | 278 |
| 0040 | 13/32 | .406 | .382 | | .029 | | .039 | .012 | .025 | | .366 | | .63 | .61 | .090 | .054 | .033 | .039 | 0.43 | 1430 | 275 |

Standard material - carbon spring steel. Standard finish - phosphate and oil.

# STANDARD EXTERNAL CIRCLIPS AMERICAN SPECIFICATIONS *

## N1400 (Continued)

Equivalent to MIL-R-21248/MS 16624

ANDERTON®

| SIZE CODE | Shaft (S) S (frac) | Shaft (S) S (dec) | Groove (G) G | Tol. | W | Tol. | n (min) | d ~ | Circlip (F) t | Tol. | D | Tol. | C | C1 | L (max) | b ~ | w ~ | h (min) | Wt. (lb/k) | Tc† (lb.f) | Tg† (lb.f) |
|---|---|---|---|---|---|---|---|---|---|---|---|---|---|---|---|---|---|---|---|---|---|
| 0043 | 7/16 | .438 | .412 | | .029 | | .042 | .013 | .025 | | .395 | +.002 −.005 | .66 | .64 | .091 | .055 | .033 | .039 | 0.50 | 1550 | 322 |
| 0046 | 15/32 | .469 | .443 | | .029 | | .042 | .013 | .025 | | .428 | | .68 | .66 | .091 | .060 | .035 | .039 | 0.54 | 1660 | 345 |
| 0050 | 1/2 | .500 | .468 | ±.002 | .039 | | .051 | .016 | .035 | | .461 | | .77 | .74 | .111 | .065 | .040 | .045 | 0.91 | 2470 | 452 |
| 0055 | — | .551 | .519 | | .039 | | .051 | .016 | .035 | | .509 | | .81 | .78 | .111 | .053 | .036 | .045 | 0.90 | 2730 | 500 |
| 0056 | 9/16 | .562 | .530 | | .039 | | .051 | .016 | .035 | | .521 | | .82 | .79 | .111 | .072 | .041 | .045 | 1.10 | 2780 | 508 |
| 0059 | 19/32 | .594 | .559 | | .039 | | .057 | .017 | .035 | | .550 | | .86 | .83 | .112 | .076 | .043 | .045 | 1.20 | 2940 | 588 |
| 0062 | 5/8 | .625 | .588 | | .039 | | .060 | .018 | .035 | | .579 | | .90 | .87 | .113 | .080 | .045 | .045 | 1.30 | 3090 | 654 |
| 0066 | 43/64 | .672 | .631 | | .039 | +.003 −.000 | .066 | .020 | .035 | | .621 | | .93 | .89 | .113 | .082 | .043 | .045 | 1.40 | 3320 | 780 |
| 0068 | 11/16 | .688 | .646 | | .046 | | .068 | .021 | .042 | | .635 | +.005 −.010 | 1.01 | .97 | .140 | .084 | .048 | .050 | 1.80 | 4080 | 817 |
| 0075 | 3/4 | .750 | .704 | | 046 | | .074 | .023 | .042 | | .693 | | 1.09 | 1.05 | .140 | .092 | .051 | .050 | 2.10 | 4450 | 975 |
| 0078 | 25/32 | .781 | .733 | ±.003 | 046 | | .076 | .024 | .042 | | .722 | | 1.12 | 1.08 | .140 | .094 | .052 | .050 | 2.2 | 4600 | 1060 |
| 0081 | 13/16 | .812 | .762 | | 046 | | .080 | .025 | .042 | | .751 | | 1.15 | 1.10 | .140 | .096 | .054 | .050 | 2.5 | 4800 | 1150 |
| 0087 | 7/8 | .875 | .821 | | .046 | | .085 | .027 | .042 | ±.002 | .810 | | 1.21 | 1.16 | .141 | .104 | .057 | .050 | 2.8 | 5200 | 1340 |
| 0093 | 15/16 | .938 | .882 | | .046 | | .088 | .028 | .042 | | .867 | | 1.34 | 1.29 | .170 | .110 | .063 | .076 | 3.1 | 5600 | 1480 |
| 0098 | 63/64 | .984 | .926 | | .046 | | .091 | .029 | .042 | | .910 | | 1.39 | 1.34 | .171 | .114 | .065 | .076 | 3.5 | 5800 | 1610 |
| 0100 | 1 | 1.000 | .940 | | .046 | | .094 | .030 | .042 | | .925 | | 1.41 | 1.35 | .171 | .116 | .065 | .076 | 3.6 | 5900 | 1700 |
| 0102 | — | 1.023 | .961 | | .046 | | .097 | .031 | .042 | | .946 | | 1.43 | 1.37 | .172 | .118 | .066 | .076 | 3.9 | 6100 | 1790 |
| 0106 | 1.1/16 | 1.062 | .998 | | .056 | | .102 | .032 | .050 | | .982 | | 1.50 | 1.44 | .185 | .122 | .069 | .076 | 4.8 | 7500 | 1920 |
| 0112 | 1.1/8 | 1.125 | 1.059 | | .056 | | .105 | .033 | .050 | | 1.041 | | 1.55 | 1.49 | .186 | .128 | .071 | .076 | 5.1 | 7900 | 2100 |
| 0118 | 1.3/16 | 1.188 | 1.118 | | .056 | | .111 | .035 | .050 | | 1.098 | | 1.61 | 1.54 | .186 | .132 | .072 | .076 | 5.6 | 8400 | 2350 |
| 0125 | 1.1/4 | 1.250 | 1.176 | ±.004 | .056 | | .117 | .037 | .050 | | 1.156 | +.010 −.015 | 1.69 | 1.62 | .187 | .140 | .076 | .076 | 5.9 | 8800 | 2610 |
| 0131 | 1.5/16 | 1.312 | 1.232 | | .056 | | .126 | .040 | .050 | | 1.214 | | 1.75 | 1.67 | .187 | .146 | .077 | .076 | 6.8 | 9300 | 2970 |
| 0137 | 1.3/8 | 1.375 | 1.291 | | .056 | | .132 | .042 | .050 | | 1.272 | | 1.80 | 1.72 | .188 | .152 | .082 | .076 | 7.2 | 9700 | 3270 |
| 0143 | 1.7/16 | 1.438 | 1.350 | | .056 | | .138 | .044 | .050 | | 1.333 | | 1.87 | 1.79 | .188 | .160 | .086 | .076 | 8.1 | 10200 | 3580 |
| 0150 | 1.1/2 | 1.500 | 1.406 | | .056 | +.004 −.000 | .147 | .047 | .050 | | 1.387 | | 1.99 | 1.90 | .218 | .168 | .091 | .118 | 9.0 | 10600 | 3990 |
| 0156 | 1.9/16 | 1.562 | 1.468 | | .068 | | .148 | .047 | .062 | | 1.446 | | 1.95 | 1.85 | .189 | .180 | .098 | .100 | 11.7 | 10700 | 4150 |
| 0162 | 1.5/8 | 1.625 | 1.529 | | .068 | | .151 | .048 | .062 | | 1.503 | | 2.17 | 2.08 | .189 | .180 | .097 | .100 | 12.8 | 11100 | 4410 |
| 0168 | 1.11/16 | 1.688 | 1.589 | | .068 | | .156 | .049 | .062 | | 1.560 | | 2.04 | 1.95 | .205 | .197 | .099 | .100 | 13.2 | 11500 | 4720 |
| 0175 | 1.3/4 | 1.750 | 1.650 | | .068 | | .157 | .050 | .062 | | 1.618 | +.013 −.020 | 2.11 | 2.01 | .205 | .197 | .101 | .100 | 13.8 | 11900 | 4950 |
| 0177 | — | 1.772 | 1.669 | ±.005 | .068 | | .162 | .051 | .062 | | 1.618 | | 2.19 | 2.09 | .205 | .197 | .102 | .100 | 14.1 | 12100 | 5160 |
| 0181 | 1.13/16 | 1.812 | 1.708 | | .068 | | .163 | .052 | .062 | | 1.675 | | 2.23 | 2.13 | .205 | .197 | .095 | .100 | 14.7 | 12400 | 5330 |
| 0187 | 1.7/8 | 1.875 | 1.769 | | .068 | | .166 | .053 | .062 | | 1.735 | | 2.29 | 2.19 | .205 | .197 | .104 | .100 | 15.5 | 12800 | 5620 |
| 0196 | — | 1.968 | 1.857 | | .068 | | .174 | .055 | .062 | | 1.819 | | 2.39 | 2.27 | .205 | .197 | .106 | .123 | 18.2 | 13400 | 5170 |
| 0200 | 2 | 2.000 | 1.886 | | .068 | | .178 | .057 | .062 | | 1.850 | | 2.48 | 2.36 | .232 | .224 | .108 | .123 | 19.2 | 13600 | 6450 |
| 0206 | 2.1/16 | 2.062 | 1.946 | | .086 | | .183 | .058 | .078 | | 1.906 | | 2.52 | 2.40 | .225 | .217 | .111 | .123 | 22.6 | 17700 | 6760 |
| 0212 | 2.1/8 | 2.125 | 2.003 | | .086 | | .192 | .061 | .078 | | 1.964 | | 2.61 | 2.48 | .236 | .228 | .120 | .123 | 24.4 | 18200 | 7330 |
| 0215 | 2.5/32 | 2.156 | 2.032 | | .086 | | .195 | .062 | .078 | | 1.993 | | 2.62 | 2.49 | .225 | .217 | .113 | .123 | 26.6 | 18500 | 7560 |
| 0225 | 2.1/4 | 2.250 | 2.120 | | .086 | | .204 | .065 | .078 | | 2.081 | +.015 −.025 | 2.87 | 2.74 | .225 | .217 | .116 | .123 | 26.0 | 19300 | 8270 |
| 0231 | 2.5/16 | 2.312 | 2.178 | | .086 | | .210 | .067 | .078 | | 2.139 | | 2.94 | 2.81 | .225 | .217 | .118 | .123 | 28.4 | 19800 | 8760 |
| 0237 | 2.3/8 | 2.375 | 2.239 | | .086 | | .213 | .068 | .078 | | 2.197 | | 2.86 | 2.72 | .236 | .228 | .119 | .123 | 27.9 | 20400 | 9130 |
| 0243 | 2.7/16 | 2.438 | 2.299 | | .086 | | .217 | .069 | .078 | | 2.255 | | 2.92 | 2.78 | .236 | .228 | .120 | .123 | 29.4 | 20900 | 9580 |
| 0250 | 2.1/2 | 2.500 | 2.360 | | .086 | | .219 | .070 | .078 | | 2.313 | | 2.98 | 2.84 | .236 | .228 | .122 | .123 | 29.7 | 21400 | 9900 |
| 0255 | — | 2.559 | 2.419 | | .086 | | .219 | .070 | .078 | | 2.377 | | 3.09 | 2.94 | .258 | .250 | .130 | .123 | 31.7 | 21900 | 10100 |
| 0262 | 2.5/8 | 2.625 | 2.481 | | .086 | | .225 | .072 | .078 | | 2.428 | | 3.11 | 2.96 | .236 | .228 | .120 | .123 | 35.0 | 22500 | 10700 |
| 0268 | 2.11/16 | 2.688 | 2.541 | | .086 | | .230 | .073 | .078 | | 2.485 | | 3.32 | 3.18 | .273 | .246 | .129 | .123 | 36.0 | 23000 | 11200 |
| 0275 | 2.3/4 | 2.750 | 2.602 | | .103 | | .231 | .074 | .093 | ±.003 | 2.543 | | 3.33 | 3.18 | .284 | .276 | .145 | .123 | 47.0 | 28100 | 11500 |
| 0287 | 2.7/8 | 2.875 | 2.721 | | .103 | +.005 −.000 | .240 | .077 | .093 | | 2.659 | | 3.42 | 3.26 | .268 | .260 | .133 | .123 | 48.4 | 29400 | 12500 |
| 0293 | 2.15/16 | 2.938 | 2.779 | | .103 | | .247 | .079 | .093 | | 2.717 | | 3.49 | 3.32 | .268 | .260 | .125 | .123 | 50.0 | 30000 | 13200 |
| 0300 | 3 | 3.000 | 2.838 | | .103 | | .252 | .081 | .093 | | 2.775 | | 3.55 | 3.38 | .268 | .260 | .138 | .123 | 51.5 | 30700 | 13700 |
| 0306 | 3.1/16 | 3.062 | 2.898 | | .103 | | .255 | .082 | .093 | | 2.832 | | 3.61 | 3.44 | .268 | .260 | .131 | .123 | 56.8 | 31300 | 14200 |
| 0312 | 3.1/8 | 3.125 | 2.957 | ±.006 | .103 | | .261 | .084 | .093 | | 2.892 | | 3.75 | 3.57 | .305 | .272 | .141 | .123 | 57.9 | 32000 | 14800 |
| 0315 | 3.5/32 | 3.156 | 2.986 | | .103 | | .264 | .085 | .093 | | 2.920 | | 3.74 | 3.56 | .284 | .276 | .143 | .123 | 59.0 | 32300 | 15200 |
| 0325 | 3.1/4 | 3.250 | 3.076 | | .103 | | .270 | .087 | .093 | | 3.006 | | 3.83 | 3.65 | .284 | .276 | .145 | .123 | 61.9 | 33200 | 16000 |
| 0334 | 3.11/32 | 3.346 | 3.166 | | .103 | | .279 | .090 | .093 | | 3.092 | +.020 −.030 | 3.93 | 3.74 | .284 | .276 | .147 | .123 | 63.9 | 34200 | 17000 |
| 0343 | 3.7/16 | 3.438 | 3.257 | | .103 | | .280 | .090 | .093 | | 3.179 | | 4.02 | 3.83 | .284 | .276 | .130 | .123 | 65.9 | 35200 | 17600 |
| 0350 | 3.1/2 | 3.500 | 3.316 | | .120 | | .285 | .092 | .109 | | 3.237 | | 4.15 | 3.96 | .320 | .285 | .148 | .123 | 71.9 | 42000 | 18200 |
| 0354 | — | 3.543 | 3.357 | | .120 | | .288 | .093 | .109 | | 3.277 | | 4.20 | 4.00 | .320 | .288 | .149 | .123 | 72.9 | 42500 | 18600 |
| 0362 | 3.5/8 | 3.625 | 3.435 | | .120 | | .294 | .095 | .109 | | 3.352 | | 4.28 | 4.09 | .323 | .315 | .153 | .123 | 76.0 | 43400 | 19500 |
| 0368 | 3.11/16 | 3.688 | 3.493 | | .120 | | .301 | .097 | .109 | | 3.410 | | 4.31 | 4.11 | .335 | .302 | .156 | .123 | 80.0 | 44200 | 20300 |
| 0375 | 3.3/4 | 3.750 | 3.552 | | .120 | | .306 | .099 | .109 | | 3.468 | | 4.44 | 4.23 | .337 | .310 | .160 | .123 | 82.9 | 44900 | 21000 |
| 0387 | 3.7/8 | 3.875 | 3.673 | | .120 | | .312 | .101 | .109 | | 3.584 | | 4.56 | 4.35 | .335 | .318 | .163 | .123 | 87.9 | 46400 | 22100 |
| 0393 | 3.15/16 | 3.938 | 3.734 | | .120 | | .315 | .102 | .109 | | 3.642 | | 4.60 | 4.39 | .323 | .318 | .163 | .123 | 95.0 | 47200 | 22700 |
| 0400 | 4 | 4.000 | 3.792 | | .120 | | .321 | .104 | .109 | | 3.700 | | 4.72 | 4.50 | .352 | .344 | .176 | .123 | 100 | 47900 | 23500 |
| 0425 | 4.1/4 | 4.250 | 4.065 | | .120 | | .287 | .092 | .109 | | 3.989 | | 4.91 | 4.72 | .323 | .318 | .176 | .123 | 112 | 50900 | 22200 |
| 0437 | 4.3/8 | 4.375 | 4.190 | | .120 | | .287 | .092 | .109 | | 4.106 | | 5.04 | 4.84 | .323 | .318 | .181 | .123 | 115 | 52400 | 22900 |
| 0450 | 4.1/2 | 4.500 | 4.310 | | .120 | | .294 | .095 | .109 | | 4.223 | | 5.16 | 4.96 | .323 | .285 | .128 | .123 | 100 | 53900 | 24200 |
| 0475 | 4.3/4 | 4.750 | 4.550 | | .120 | | .309 | .100 | .109 | | 4.458 | | 5.47 | 5.26 | .437 | .303 | .152 | .123 | 113 | 56900 | 26900 |
| 0500 | 5 | 5.000 | 4.790 | | .120 | | .324 | .105 | .109 | | 4.692 | | 5.72 | 5.50 | .445 | .360 | .186 | .151 | 149 | 59900 | 29700 |
| 0525 | 5.1/4 | 5.250 | 5.030 | | .139 | | .339 | .110 | .125 | | 4.927 | | 6.18 | 5.95 | .457 | .372 | .211 | .151 | 188 | 72200 | 32700 |
| 0550 | 5.1/2 | 5.500 | 5.265 | ±.007 | .139 | +.006 −.000 | .363 | .117 | .125 | ±.004 | 5.162 | +.020 −.040 | 6.43 | 6.19 | .457 | .390 | .209 | .151 | 196 | 75600 | 36500 |
| 0575 | 5.3/4 | 5.750 | 5.505 | | .139 | | .378 | .122 | .125 | | 5.396 | | 6.68 | 6.43 | .457 | .408 | .220 | .151 | 199 | 79000 | 39800 |
| 0600 | 6 | 6.000 | 5.745 | | .139 | | .393 | .127 | .125 | | 5.631 | | 6.93 | 6.67 | .457 | .381 | .171 | .151 | 212 | 82500 | 43300 |
| 0625 | 6.1/4 | 6.250 | 5.985 | | .174 | | .409 | .132 | .156 | | 5.866 | +.020 −.050 | 7.28 | 7.01 | .508 | .396 | .176 | .151 | 281 | 107000 | 46800 |
| 0650 | 6.1/2 | 6.500 | 6.225 | | .174 | | .425 | .137 | .156 | | 6.100 | | 7.53 | 7.25 | .508 | .438 | .236 | .151 | 322 | 112000 | 50500 |
| 0675 | 6.3/4 | 6.750 | 6.465 | | .174 | | .440 | .142 | .156 | | 6.335 | | 7.78 | 7.49 | .508 | .456 | .246 | .182 | 356 | 116000 | 54400 |
| 0700 | 7 | 7.000 | 6.705 | | .174 | +.008 −.000 | .455 | .147 | .156 | | 6.570 | | 8.03 | 7.73 | .508 | .460 | .256 | .182 | 388 | 120000 | 58400 |
| 0750 | 7.1/2 | 7.500 | 7.180 | ±.008 | .209 | | .492 | .160 | .187 | ±.005 | 7.039 | | 8.78 | 8.45 | .632 | .507 | .269 | .182 | 534 | 143000 | 67900 |
| 0800 | 8 | 8.000 | 7.660 | | .209 | | .522 | .170 | .187 | | 7.508 | | 9.27 | 8.93 | .632 | .540 | .275 | .182 | 628 | 153000 | 76900 |
| 0850 | 8.1/2 | 8.500 | 8.140 | | .209 | | .552 | .180 | .187 | | 7.977 | +.020 −.160 | 9.78 | 9.41 | .632 | .573 | .300 | .182 | 700 | 163000 | 86500 |
| 0900 | 9 | 9.000 | 8.620 | | .209 | | .582 | .190 | .187 | | 8.445 | | 10.25 | 9.87 | No Lugs | .609 | .410 | .182 | 756 | 172000 | 96700 |
| 0950 | 9.1/2 | 9.500 | 9.100 | | .209 | | .612 | .200 | .187 | | 8.915 | | 10.78 | 10.38 | | .625 | .420 | .182 | 820 | 181000 | 107400 |
| 1000 | 10 | 10.000 | 9.575 | | .209 | | .650 | .212 | .187 | | 9.385 | | 11.27 | 10.85 | .632 | .625 | .370 | .182 | 964 | 191000 | 120200 |

All dimensions in mm

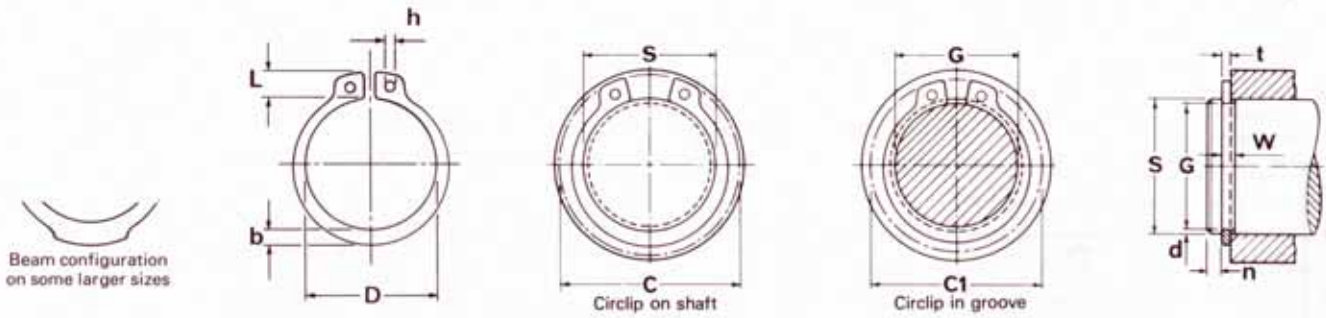


† Thrust load calculations see pages 9 & 10

| SIZE CODE | Shaft S | Groove (G) G | Tol. | W | Tol. | n (min) | d ~ | Circlip (F) t | Tol. | D | Tol. | C | C1 | L (max) | b ~ | h (min) | Wt. (kg/k) | Tc† (N) | Tg† (N) | SIZE CODE |
|---|---|---|---|---|---|---|---|---|---|---|---|---|---|---|---|---|---|---|---|---|
| 0120 | 12 | 11.5 | | 1.60 | | 0.7 | 0.25 | 1.50 | | 11.0 | | 19.3 | 18.3 | 3.4 | 1.8 | 1.7 | 0.75 | 17500 | 1130 | 0120 |
| 0150 | 15 | 14.3 | | 1.60 | | 1.1 | 0.35 | 1.50 | | 13.8 | +0.10 −0.36 | 25.1 | 23.9 | 4.8 | 2.0 | 2.0 | 1.10 | 21900 | 2260 | 0150 |
| 0160 | 16 | 15.2 | +0.00 −0.11 | 1.60 | | 1.2 | 0.40 | 1.50 | | 14.7 | | 26.5 | 25.2 | 5.0 | 2.5 | 2.0 | 1.19 | 23400 | 2410 | 0160 |
| 0170 | 17 | 16.2 | | 1.60 | | 1.5 | 0.40 | 1.50 | | 15.7 | | 27.5 | 26.2 | 5.0 | 2.6 | 2.0 | 1.39 | 24800 | 3200 | 0170 |
| 0180 | 18 | 17.0 | | 1.60 | | 1.5 | 0.50 | 1.50 | +0.00 −0.06 | 16.5 | | 28.7 | 27.2 | 5.1 | 2.7 | 2.0 | 1.56 | 26300 | 4070 | 0180 |
| 0190 | 19 | 17.8 | | 1.60 | | 1.8 | 0.60 | 1.50 | | 17.5 | +0.13 −0.42 | 29.9 | 28.2 | 5.2 | 2.5 | 2.0 | 1.45 | 27800 | 4300 | 0190 |
| 0200 | 20 | 19.0 | +0.00 −0.13 | 1.85 | | 1.5 | 0.50 | 1.75 | | 18.5 | | 31.5 | 30.0 | 5.5 | 3.0 | 2.0 | 2.19 | 34100 | 4150 | 0200 |
| 0220 | 22 | 21.0 | | 1.85 | | 1.5 | 0.50 | 1.75 | | 20.5 | | 34.5 | 33.0 | 6.0 | 3.1 | 2.0 | 2.42 | 37500 | 4980 | 0220 |
| 0230 | 23 | 21.8 | +0.00 −0.15 | 1.85 | | 1.8 | 0.60 | 1.75 | | 21.3 | | 35.7 | 34.0 | 6.1 | 3.2 | 2.0 | 2.60 | 39200 | 5200 | 0230 |
| 0240 | 24 | 22.9 | | 1.85 | | 1.7 | 0.55 | 1.75 | | 22.2 | | 37.1 | 35.5 | 6.3 | 3.2 | 2.0 | 2.76 | 40900 | 5880 | 0240 |
| 0250 | 25 | 23.9 | | 2.15 | | 1.7 | 0.55 | 2.00 | | 23.2 | | 38.3 | 36.7 | 6.4 | 3.4 | 2.0 | 3.59 | 48700 | 6130 | 0250 |
| 0260 | 26 | 24.4 | +0.00 −0.21 | 2.15 | | 2.4 | 0.80 | 2.00 | | 23.6 | +0.21 −0.42 | 39.7 | 37.6 | 6.6 | 3.3 | 2.0 | 3.65 | 50600 | 7840 | 0260 |
| 0270 | 27 | 25.5 | | 2.15 | | 2.3 | 0.75 | 2.00 | | 24.7 | | 40.5 | 38.5 | 6.5 | 3.4 | 2.0 | 3.85 | 52600 | 7630 | 0270 |
| 0280 | 28 | 26.6 | | 2.15 | | 2.1 | 0.70 | 2.00 | | 25.9 | | 41.5 | 39.6 | 6.5 | 3.5 | 2.0 | 4.25 | 54500 | 8440 | 0280 |
| 0290 | 29 | 27.6 | | 2.15 | | 2.1 | 0.70 | 2.00 | | 26.9 | | 42.5 | 40.6 | 6.5 | 3.8 | 2.0 | 4.30 | 56500 | 7650 | 0290 |
| 0300 | 30 | 28.6 | | 2.15 | | 2.1 | 0.70 | 2.00 | | 27.9 | | 43.5 | 41.6 | 6.5 | 4.1 | 2.0 | 5.35 | 58400 | 9610 | 0300 |
| 0320 | 32 | 30.3 | | 2.15 | | 2.6 | 0.85 | 2.00 | | 29.6 | | 45.5 | 43.3 | 6.5 | 4.1 | 2.5 | 5.85 | 62300 | 10200 | 0320 |
| 0330 | 33 | 31.3 | | 2.15 | +0.14 −0.00 | 2.5 | 0.85 | 2.00 | +0.00 −0.07 | 30.5 | | 46.9 | 44.7 | 6.7 | 4.0 | 2.5 | 5.20 | 64300 | 10600 | 0330 |
| 0340 | 34 | 32.3 | | 2.65 | | 2.6 | 0.85 | 2.50 | | 31.5 | +0.25 −0.50 | 47.9 | 45.7 | 6.6 | 4.2 | 2.5 | 7.05 | 82800 | 12200 | 0340 |
| 0350 | 35 | 33.0 | | 2.65 | | 3.0 | 1.00 | 2.50 | | 32.2 | | 48.9 | 46.4 | 6.7 | 4.2 | 2.5 | 7.20 | 85200 | 13200 | 0350 |
| 0360 | 36 | 33.8 | +0.00 −0.25 | 2.65 | | 3.3 | 1.10 | 2.50 | | 33.0 | | 49.9 | 47.2 | 6.7 | 4.2 | 2.5 | 7.50 | 87600 | 14900 | 0360 |
| 0380 | 38 | 36.0 | | 2.65 | | 3.0 | 1.00 | 2.50 | | 35.2 | | 52.1 | 49.6 | 6.8 | 4.3 | 2.5 | 8.30 | 92500 | 15800 | 0380 |
| 0400 | 40 | 37.5 | | 2.65 | | 3.8 | 1.25 | 2.50 | | 36.5 | | 55.0 | 51.5 | 7.0 | 4.4 | 2.5 | 8.60 | 80900 | 18800 | 0400 |
| 0420 | 42 | 39.5 | | 2.65 | | 3.8 | 1.25 | 2.50 | | 38.5 | | 57.4 | 53.9 | 7.2 | 4.5 | 2.5 | 9.30 | 84900 | 19800 | 0420 |
| 0450 | 45 | 42.5 | | 2.65 | | 3.8 | 1.25 | 2.50 | | 41.5 | +0.39 −0.90 | 61.0 | 57.5 | 7.5 | 4.7 | 2.5 | 10.70 | 91000 | 21200 | 0450 |
| 0480 | 48 | 45.5 | | 2.65 | | 3.8 | 1.25 | 2.50 | | 44.5 | | 64.6 | 61.1 | 7.8 | 5.0 | 2.5 | 11.30 | 97100 | 22600 | 0480 |
| 0500 | 50 | 47.0 | | 3.15 | | 4.5 | 1.50 | 3.00 | | 45.8 | | 67.0 | 63.0 | 8.0 | 5.1 | 2.5 | 15.30 | 121000 | 28300 | 0500 |
| 0520 | 52 | 49.0 | | 3.15 | | 4.5 | 1.50 | 3.00 | | 47.8 | | 69.4 | 65.4 | 8.2 | 5.2 | 2.5 | 16.60 | 126000 | 29400 | 0520 |
| 0550 | 55 | 52.0 | | 3.15 | | 4.5 | 1.50 | 3.00 | +0.00 −0.08 | 50.8 | | 73.0 | 69.0 | 8.5 | 5.4 | 2.5 | 17.10 | 133000 | 31100 | 0550 |
| 0580 | 58 | 55.0 | | 3.15 | | 4.5 | 1.50 | 3.00 | | 53.8 | | 76.6 | 72.6 | 8.8 | 5.6 | 2.5 | 18.90 | 141000 | 32800 | 0580 |
| 0600 | 60 | 57.0 | +0.00 −0.30 | 3.15 | | 4.5 | 1.50 | 3.00 | | 55.8 | | 79.0 | 75.0 | 9.0 | 5.8 | 2.5 | 19.40 | 146000 | 33900 | 0600 |
| 0650 | 65 | 62.0 | | 4.15 | | 4.5 | 1.50 | 4.00 | | 60.8 | +0.46 −1.10 | 84.6 | 80.6 | 9.3 | 6.3 | 3.0 | 29.10 | 210000 | 36800 | 0650 |
| 0700 | 70 | 67.0 | | 4.15 | | 4.5 | 1.50 | 4.00 | | 65.5 | | 90.0 | 86.0 | 9.5 | 6.6 | 3.0 | 35.30 | 226000 | 39600 | 0700 |
| 0750 | 75 | 72.0 | | 4.15 | | 4.5 | 1.50 | 4.00 | | 70.5 | | 95.4 | 91.4 | 9.7 | 7.0 | 3.0 | 39.30 | 243000 | 42400 | 0750 |
| 0800 | 80 | 76.5 | | 4.15 | | 5.3 | 1.75 | 4.00 | +0.00 −0.10 | 74.5 | | 100.6 | 96.1 | 9.8 | 7.4 | 3.0 | 43.70 | 259000 | 52800 | 0800 |
| 0850 | 85 | 81.5 | | 4.15 | | 5.3 | 1.75 | 4.00 | | 79.5 | | 106.0 | 101.5 | 10.0 | 7.8 | 3.5 | 48.50 | 275000 | 56100 | 0850 |
| 0900 | 90 | 86.5 | +0.00 −0.35 | 4.15 | | 5.3 | 1.75 | 4.00 | | 84.5 | +0.54 −1.30 | 111.4 | 106.9 | 10.2 | 8.2 | 3.5 | 59.40 | 291000 | 59400 | 0900 |
| 0950 | 95 | 91.5 | | 4.15 | | 5.3 | 1.75 | 4.00 | | 89.5 | | 116.6 | 112.1 | 10.3 | 8.6 | 3.5 | 61.20 | 307000 | 62700 | 0950 |
| 1000 | 100 | 96.5 | | 4.15 | | 5.3 | 1.75 | 4.00 | | 94.5 | | 122.0 | 117.5 | 10.5 | 9.0 | 3.5 | 71.60 | 324000 | 66000 | 1000 |

Standard material - carbon spring steel. Standard finish - phosphate and oil.

# STANDARD HEAVY DUTY CIRCLIPS
## N1460

Equivalent to MIL-R-21248/MS 3217

All dimensions in inches
Standard material - carbon spring steel.
Standard finish - phosphate and oil.

Beam configuration on some larger sizes

† Thrust load calculations see pages 9 & 10

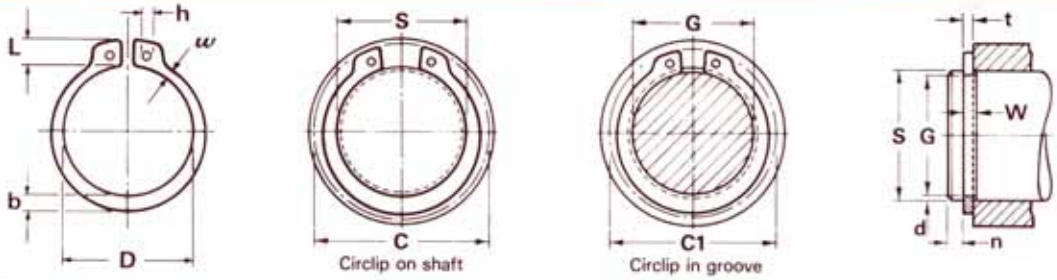


| SIZE CODE | Shaft (S) S (frac) | Shaft (S) S (dec) | Groove (G) G | Groove (G) Tol. | Groove (G) W | Groove (G) Tol. | Groove (G) n (min) | Groove (G) d ~ | Circlip (F) t | Circlip (F) Tol. | Circlip (F) D | Circlip (F) Tol. | Circlip (F) C | Circlip (F) C1 | Circlip (F) L (max) | Circlip (F) b ~ | Circlip (F) w ~ | Circlip (F) h (min) | Wt. (lb/k) | Tc† (lb.f) | Tg† (lb.f) |
|---|---|---|---|---|---|---|---|---|---|---|---|---|---|---|---|---|---|---|---|---|---|
| 0050 | 1/2 | .500 | .468 | +.001 −.002 | .056 | +.004 −.000 | .048 | .016 | .050 | ±.002 | .460 | +.005 −.010 | .75 | .72 | .124 | .090 | .050 | .048 | 1.6 | 3500 | 450 |
| 0059 | — | .591 | .555 | +.001 −.003 | .056 | | .054 | .018 | .050 | | .543 | | .86 | .83 | .134 | .104 | .057 | .048 | 2.2 | 4180 | 600 |
| 0062 | 5/8 | .625 | .588 | | .056 | | .057 | .019 | .050 | | .575 | | .90 | .86 | .134 | .106 | .060 | .048 | 2.3 | 4420 | 670 |
| 0066 | — | .669 | .629 | | .056 | | .060 | .020 | .050 | | .616 | | .94 | .90 | .134 | .114 | .062 | .048 | 2.6 | 4730 | 750 |
| 0075 | 3/4 | .750 | .704 | | .086 | | .069 | .023 | .078 | ±.003 | .689 | | 1.12 | 1.08 | .185 | .127 | .077 | .076 | 5.6 | 8270 | 975 |
| 0087 | 7/8 | .875 | .821 | +.002 −.004 | .086 | +.005 −.000 | .081 | .027 | .078 | | .804 | +.010 −.015 | 1.25 | 1.20 | .185 | .148 | .084 | .076 | 7.5 | 9650 | 1330 |
| 0098 | 63/64 | .984 | .925 | | .086 | | .090 | .030 | .078 | | .906 | | 1.36 | 1.30 | .185 | .156 | .089 | .076 | 7.8 | 10800 | 1670 |
| 0098 | 1 | 1.000 | .938 | | .086 | | .093 | .031 | .078 | | .906 | | 1.37 | 1.31 | .185 | .156 | .089 | .076 | 7.8 | 11000 | 1750 |
| 0106 | 1.1/16 | 1.062 | .998 | | .103 | | .096 | .032 | .093 | | .978 | | 1.52 | 1.46 | .225 | .163 | .092 | .091 | 11.5 | 14000 | 1920 |
| 0112 | 1.1/8 | 1.125 | 1.059 | | .103 | | .099 | .033 | .093 | | 1.036 | | 1.58 | 1.52 | .225 | .175 | .100 | .091 | 12.5 | 14800 | 2100 |
| 0118 | — | 1.181 | 1.111 | | .103 | | .105 | .035 | .093 | | 1.087 | | 1.64 | 1.57 | .225 | .176 | .098 | .091 | 13.5 | 15500 | 2340 |
| 0125 | 1.1/4 | 1.250 | 1.174 | | .103 | | .114 | .038 | .093 | | 1.150 | | 1.70 | 1.63 | .225 | .185 | .103 | .091 | 14.9 | 16400 | 2690 |
| 0131 | 1.5/16 | 1.312 | 1.234 | | .103 | | .117 | .039 | .093 | | 1.208 | | 1.77 | 1.69 | .225 | .196 | .110 | .091 | 16.0 | 17200 | 2890 |
| 0137 | 1.3/8 | 1.375 | 1.291 | | .103 | | .126 | .042 | .093 | | 1.268 | | 1.83 | 1.75 | .225 | .200 | .110 | .091 | 17.8 | 18000 | 3260 |
| 0150 | 1.1/2 | 1.500 | 1.406 | | .120 | | .141 | .047 | .109 | | 1.380 | | 1.94 | 1.84 | .215 | .205 | .105 | .107 | 27.0 | 19000 | 3990 |
| 0156 | 1.5/8 | 1.562 | 1.468 | +.003 −.004 | .120 | | .141 | .047 | .109 | | 1.437 | +.013 −.020 | 2.00 | 1.90 | .215 | .205 | .110 | .098 | 25.0 | 20000 | 4150 |
| 0175 | 1.3/4 | 1.750 | 1.650 | | .120 | | .150 | .050 | .109 | | 1.608 | | 2.18 | 2.08 | .215 | .205 | .111 | .098 | 26.5 | 22500 | 4950 |
| 0193 | 1.15/16 | 1.938 | 1.826 | | .139 | +.006 −.000 | .178 | .056 | .125 | ±.004 | 1.782 | | 2.47 | 2.36 | .264 | .256 | .121 | .123 | 36.6 | 28500 | 6140 |
| 0200 | 2 | 2.000 | 1.880 | | .139 | | .180 | .060 | .125 | | 1.840 | | 2.53 | 2.41 | .265 | .256 | .122 | .123 | 40.0 | 29500 | 6780 |

# STANDARD SERIES 'E' CIRCLIPS
## B1500

Incorporating BS3673 pt.2

All dimensions in inches

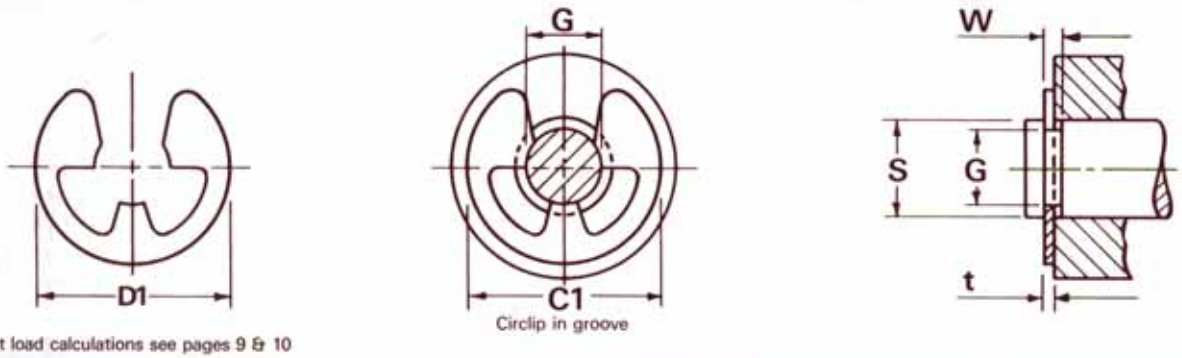


† Thrust load calculations see pages 9 & 10

| SIZE CODE | B.S. Ref. | Shaft (S) S | Shaft (S) Tol. | Groove (G) G | Groove (G) Tol. | Groove (G) W | Groove (G) Tol. | Circlip (F) D1 | Circlip (F) C1 | Circlip (F) t | Circlip (F) Tol. | Tc† (lb.f) | Tg† (lb.f) | Appli-cator | Stack-feeda | SIZE CODE |
|---|---|---|---|---|---|---|---|---|---|---|---|---|---|---|---|---|
| A052 | 054A1 | .062 | +.030 −.000 | .052 | +.002 −.0005 | .019 | +.0025 −.0000 | .156 | .165 | .015 | ±.002 | 54 | 6 | 21A | DR52A | A052 |
| A074 | 076A1 | .094 | | .074 | | .024 | | .187 | .200 | .020 | | 110 | 17 | 2B | DR74A | A074 |
| E079 | 081A1 | .110 | | .079 | | .024 | | .375 | .390 | .020 | | 130 | 32 | 6B | DR79 | E079 |
| A095 | 097A1 | .125 | +.040 −.000 | .095 | | .024 | | .230 | .240 | .020 | | 140 | 35 | 3B | DR95A | A095 |
| B095 | 097A2 | .125 | | .095 | | .029 | | .230 | .240 | .025 | | 180 | 35 | 3D | DR95B | B095 |
| A102 | 104A1 | .140 | +.050 −.000 | .102 | | .024 | | .203 | .215 | .020 | | 160 | 50 | 17B | DR102A | A102 |
| E116 | 118PS | .156 | | .116 | | .024 | | .282 | .295 | .020 | | 180 | 58 | 4B | DR116 | E116 |
| E125 | 127A1 | .188 | | .125 | | .019 | | .310 | .330 | .015 | | 160 | 110 | 4A | DR125 | E125 |
| A125 | 127A2 | .188 | | .125 | | .024 | | .310 | .330 | .020 | | 220 | 110 | 4D | DR125A | A125 |
| X125 | 127A4 | .188 | | .125 | | .024 | | .375 | .395 | .020 | | 220 | 110 | 6B | DR125X | X125 |
| Z125 | 127A3 | .188 | | .125 | +.002 −.001 | .019 | | .375 | .395 | .015 | | 160 | 110 | AM6 | DR125AX | Z125 |
| A147 | 149A1 | .188 | +.060 −.000 | .147 | | .024 | | .335 | .350 | .020 | | 220 | 72 | 5A | DR147A | A147 |
| B147 | 149A2 | .188 | | .147 | | .037 | | .335 | .350 | .032 | | 350 | 72 | 5C | DR147B | B147 |
| A188 | 190A1 | .219 | +.100 −.000 | .188 | | .034 | +.004 −.000 | .437 | .450 | .030 | | 380 | 63 | 8B | FR188A | A188 |
| A210 | 212A1 | .250 | | .210 | | .040 | | .527 | .540 | .035 | | 500 | 93 | 9C | FR210A | A210 |
| A250 | 252A1 | .312 | | .250 | | .040 | | .500 | .520 | .035 | | 630 | 180 | 9C | FR250A | A250 |

Standard material - carbon spring steel. Standard finish - phosphate and oil.

All dimensions in mm

Standard material - carbon spring steel. Standard finish - phosphate and oil.

Sizes printed in blue are preferred sizes

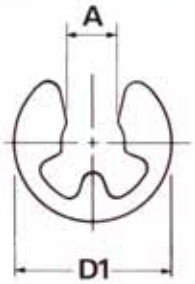


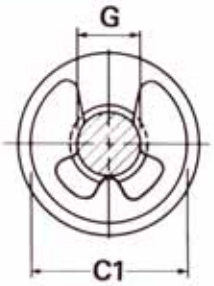


Circlip in groove

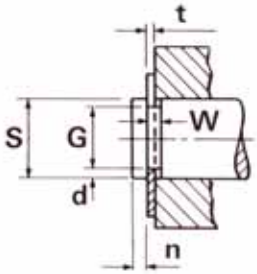


## D1500

*This size in Beryllium copper only

† Thrust load calculations see pages 9 & 10

| SIZE CODE | B.S. Ref | Shaft (S) S. | Shaft (S) Tol. | Groove (G) G. | Groove (G) Tol. | Groove (G) W. | Groove (G) Tol. | Groove (G) n (min) | Groove (G) d Nom | Circlip (F) t | Circlip (F) Tol. | Circlip (F) D1 | Circlip (F) C1 | Circlip (F) A | Circlip (F) Tol. | Tc† (N) | Tg† (N) | Applicator | BASE |
|---|---|---|---|---|---|---|---|---|---|---|---|---|---|---|---|---|---|---|---|
| *0008 | 008MS | 1.20 | ±0.20 | 0.8 | +0.00 −0.04 | 0.24 | +0.04 −0.00 | 0.4 | 0.20 | 0.20 | ±0.02 | 1.95 | 2.25 | 0.58 | ±0.04 | 63 | 30 | — | — |
| 0012 | 012MS | 1.70 | ±0.30 | 1.2 | +0.00 −0.06 | 0.34 | | 0.6 | 0.25 | 0.30 | | 2.90 | 3.25 | 1.01 | | 203 | 53 | 28 | DR 1.2 |
| 0015 | 015MS | 2.25 | ±0.25 | 1.5 | | 0.44 | | 0.8 | 0.38 | 0.40 | | 3.85 | 4.25 | 1.28 | | 358 | 105 | 21A | DR 1.5 |
| 0019 | 019MS | 2.75 | | 1.9 | | 0.54 | | 1.0 | 0.43 | 0.50 | | 4.40 | 4.8 | 1.61 | | 546 | 145 | 22 | DR 1.9 |
| 0023 | 023MS | 3.50 | ±0.50 | 2.3 | | 0.64 | | 1.0 | 0.60 | 0.60 | | 5.90 | 6.3 | 1.94 | | 835 | 260 | 3C | DR 2.3 |
| 0032 | 032MS | 4.50 | | 3.2 | +0.00 −0.075 | 0.64 | +0.05 −0.00 | 1.0 | 0.65 | 0.60 | | 6.80 | 7.3 | 2.70 | ±0.048 | 1070 | 365 | AM9 | DR 3.2 |
| 0040 | 040MS | 6.00 | ±1.00 | 4.0 | | 0.74 | | 1.2 | 1.00 | 0.70 | | 8.80 | 9.3 | 3.34 | | 1670 | 745 | 23B | DR 4 |
| 0050 | 050MS | 7.00 | | 5.0 | | 0.74 | | 1.2 | 1.00 | 0.70 | | 10.75 | 11.3 | 4.11 | | 1950 | 870 | 7B | DR 5 |
| 0060 | 060MS | 8.00 | | 6.0 | | 0.74 | | 1.2 | 1.00 | 0.70 | | 11.75 | 12.3 | 5.26 | | 2220 | 995 | 24 | DR 6 |
| 0070 | 070MS | 9.50 | ±1.50 | 7.0 | | 0.94 | | 1.5 | 1.25 | 0.90 | | 13.80 | 14.3 | 5.84 | | 3400 | 1480 | 15 | FR 7 |
| 0080 | 080MS | 10.50 | | 8.0 | +0.00 −0.09 | 1.05 | +0.08 −0.00 | 1.8 | 1.25 | 1.00 | ±0.03 | 15.60 | 16.3 | 6.52 | ±0.058 | 4170 | 1630 | AM20 | FR 8 |
| 0090 | 090MS | 12.00 | ±2.00 | 9.0 | | 1.15 | | 2.0 | 1.50 | 1.10 | | 18.20 | 18.8 | 7.63 | | 5250 | 2240 | 25 | FR 9 |
| 0100 | 100MS | 13.00 | | 10.0 | | 1.25 | | 2.0 | 1.50 | 1.20 | | 19.65 | 20.4 | 8.32 | | 6200 | 2430 | 26 | FR 10 |
| 0120 | 120MS | 15.50 | ±2.50 | 12.0 | +0.00 −0.11 | 1.35 | | 2.5 | 1.75 | 1.30 | | 22.65 | 23.4 | 10.45 | ±0.07 | 8010 | 3370 | 27 | FR 12 |
| 0150 | 150MS | 20.00 | ±4.00 | 15.0 | | 1.55 | | 3.0 | 2.50 | 1.50 | | 28.60 | 29.4 | 12.61 | | 11900 | 6220 | 20B | FR 15 |
| 0190 | 190MS | 25.50 | ±5.50 | 19.0 | +0.00 −0.13 | 1.85 | | 3.5 | 3.25 | 1.75 | | 36.70 | 37.6 | 15.92 | ±0.084 | 17700 | 10300 | 32A | FR 19 |
| 0240 | 240MS | 31.50 | ±6.50 | 24.0 | | 2.05 | | 4.0 | 3.75 | 2.00 | | 43.65 | 44.6 | 21.88 | | 25000 | 14700 | — | — |

All dimensions in inches

Standard material - carbon spring steel. Standard finish - phosphate and oil.

Sizes printed in blue are preferred sizes

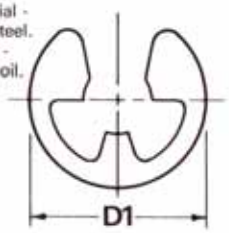


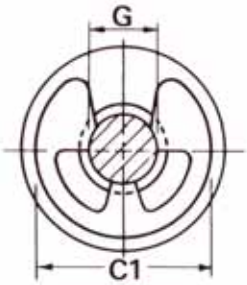


Circlip in groove

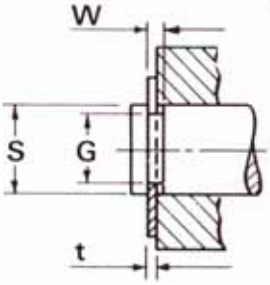


## N1500

*This size in Beryllium copper only

† Thrust load calculations see pages 9 & 10

| SIZE CODE | B.S. Ref. | Shaft (S) S | Shaft (S) Tol. | Groove (G) G | Groove (G) Tol. | Groove (G) W | Groove (G) Tol. | Circlip (F) D1 | Circlip (F) C1 | Circlip (F) t | Circlip (F) Tol. | Tc† (lb.f) | Tg† (lb.f) | Applicator | Base | SIZE CODE |
|---|---|---|---|---|---|---|---|---|---|---|---|---|---|---|---|---|
| *X004 | 028PS | .040 | +.010 −.000 | .026 | +.002 −.000 | .012 | +.002 −.000 | .079 | .090 | .010 | ±.001 | 15 | 5 | — | — | X004 |
| X006 | — | .062 | +.030 −.000 | .052 | | .012 | | .140 | .150 | .010 | | 36 | 6 | AM2 | SF2 | X006 |
| 0006 | 054PS | .062 | | .052 | | .012 | | .156 | .165 | .010 | | 36 | 6 | AM3 | SF3 | 0006 |
| Y006 | — | .062 | | .052 | | .023 | | .187 | .200 | .020 | ±.002 | 72 | 6 | — | — | Y006 |
| X009 | — | .094 | | .074 | | .018 | | .230 | .245 | .015 | | 81 | 17 | AM7 | SF4 | X009 |
| 0009 | 076PS | .094 | +.040 −.000 | .074 | | .018 | | .187 | 200 | .015 | | 81 | 17 | AM5 | SF5 | 0009 |
| X011 | 081A2 | .110 | | .079 | | .018 | | .375 | .390 | .015 | | 95 | 32 | AM6 | SF6 | X011 |
| 0012 | 097PS | .125 | | .095 | | .018 | | .230 | .240 | .015 | | 108 | 35 | AM7 | SF7 | 0012 |
| X014 | 104PS | .140 | | .102 | | .018 | | .203 | .214 | .015 | | 121 | 50 | AM8 | SF8 | X014 |
| Y014 | 112A1 | .140 | | .110 | | .018 | | .250 | .265 | .015 | | 121 | 39 | AM10 | SF10 | Y014 |
| 0014 | 107A1 | .140 | +.050 −.000 | .105 | | .029 | +.003 −.000 | .270 | .285 | .025 | | 202 | 46 | AM9 | SF9 | 0014 |
| 0015 | 118A1 | .156 | | .116 | | .029 | | .282 | .295 | .025 | | 225 | 58 | AM11 | SF11 | 0015 |
| X017 | 129PS | .172 | | .127 | | .029 | | .312 | .325 | .025 | | 248 | 72 | AM12 | SF12 | X017 |
| X018 | — | .188 | +.060 −.000 | .125 | | .029 | | .375 | .390 | .025 | | 271 | 110 | AM13 | SF13 | X018 |
| 0018 | 149PS | .188 | | .147 | | .029 | | .335 | .350 | .025 | | 271 | 72 | AM14 | SF14 | 0018 |
| X021 | 190PS | .219 | +.100 −.000 | .188 | | .029 | | .437 | .450 | .025 | ±.002 | 316 | 63 | AM15 | SF15 | X021 |
| 0025 | 212PS | .250 | | .210 | | .029 | | .527 | .540 | .025 | | 361 | 93 | AM16 | SF16 | 0025 |
| X031 | 252PS | .312 | | .250 | | .029 | | .500 | .520 | .025 | | 450 | 180 | AM16 | SF17 | X031 |
| 0037 | 306PS | .375 | | .303 | | .039 | | .660 | .680 | .035 | | 757 | 252 | AM18 | SF18 | 0037 |
| 0043 | 346PS | .438 | | .343 | | .039 | | .687 | .710 | .035 | | 885 | 388 | AM19 | SF19 | 0043 |
| X043 | 383A1 | .438 | +.120 −.000 | .380 | | .039 | | .600 | .620 | .035 | | 884 | 237 | AM20 | SF20 | X043 |
| 0050 | 399PS | .500 | | .396 | | .046 | | .800 | .820 | .042 | | 1210 | 485 | AM21 | SF21 | 0050 |
| 0062 | 488PS | .625 | | .485 | | .046 | | .940 | .960 | .042 | | 1510 | 816 | AM22 | SF22 | 0062 |
| X074 | 628A1 | .744 | | .625 | | .056 | | 1.000 | 1.020 | .050 | | 2160 | 1190 | AM23 | SF23 | X074 |
| 0075 | 583PS | .750 | | .580 | | .056 | | 1.120 | 1.140 | .050 | | 2520 | 1630 | AM24 | SF24 | 0075 |
| 0087 | 678PS | .875 | | .675 | | .056 | | 1.300 | 1.320 | .050 | | 2840 | 1370 | AM25 | SF25 | 0087 |
| X098 | — | .984 | | .835 | | .056 | | 1.500 | 1.530 | .050 | | 4250 | 1210 | AM26 | SF26 | X098 |
| X118 | — | 1.188 | +.200 −.000 | 1.079 | +.005 −.000 | .068 | +.004 −.000 | 1.626 | 1.670 | .062 | ±.003 | 4920 | 1860 | AM27 | SF27 | X118 |
| X137 | — | 1.375 | | 1.230 | | .068 | | 1.875 | 1.920 | .062 | | 4920 | 1860 | — | — | X137 |

# VARIANTS OF SERIES 'E' CIRCLIPS
## N1501 (Bowed)

Equivalent to MIL-R-21248/MS 16634

All dimensions in inches

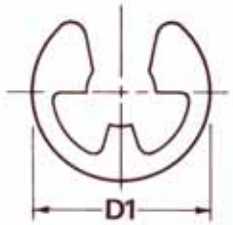


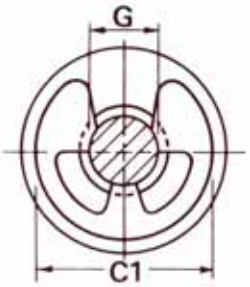


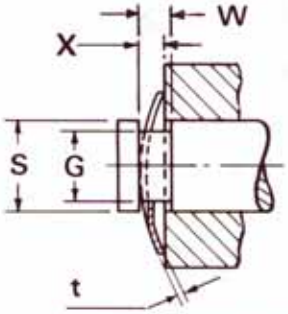


† Thrust load calculations see pages 9 & 10

Circlip in groove

E = Max. end play take up capability

| SIZE CODE | Shaft(S) S | Shaft(S) Tol. | Groove (G) G | Groove (G) Tol. | Groove (G) W | Groove (G) Tol. | Circlip (F) D1 | Circlip (F) C1 | Circlip (F) t | Circlip (F) Tol. | Tc† (lb.f) | Tg† (lb.f) | E | X (Min) | X (Max) | Appli-cator | SIZE CODE |
|---|---|---|---|---|---|---|---|---|---|---|---|---|---|---|---|---|---|
| 0009 | .094 | +.030 −.000 | .074 | +.002 −.000 | .045 | +.003 −.000 | .187 | .200 | .020 | ±.002 | 108 | 17 | .010 | .025 | .035 | AM 5W | 0009 |
| X011 | .110 | | .079 | | .035 | | .375 | .390 | .015 | | 95 | 32 | .013 | .020 | .033 | AM 6W | X011 |
| 0012 | .125 | +.040 −.000 | .095 | | .022 | | .230 | .240 | .010 | ±.0015 | 72 | 35 | .007 | .014 | .021 | AM 7 | 0012 |
| X014 | .140 | | .102 | | .019 | | .203 | .215 | .010 | | 81 | 50 | .004 | .014 | .018 | AM 8 | X014 |
| 0014 | .140 | | .105 | | .025 | | .270 | .285 | .015 | ±.002 | 121 | 46 | .003 | .020 | .023 | AM 9W | 0014 |
| 0015 | .156 | +.050 −.000 | .116 | | .027 | | .282 | .295 | .015 | | 135 | 58 | .005 | .020 | .025 | AM11 | 0015 |
| X017 | .172 | | .127 | | .029 | | .312 | .325 | .015 | | 149 | 72 | .007 | .020 | .027 | AM12 | X017 |
| X018 | .188 | +.060 −.000 | .125 | | .035 | | .375 | .390 | .015 | | 163 | 110 | .013 | .020 | .033 | AM13W | X018 |
| 0018 | .188 | | .147 | | .030 | | .335 | .350 | .015 | | 163 | 72 | .008 | .020 | .028 | AM14 | 0018 |
| X021 | .219 | | .188 | | .040 | | .437 | .450 | .015 | | 190 | 63 | .018 | .020 | .038 | AM15W | X021 |
| 0025 | .250 | +.100 −.000 | .210 | +.003 −.000 | .049 | | .527 | .540 | .025 | | 361 | 93 | .015 | .032 | .047 | 9C | 0025 |
| X031 | .311 | | .250 | | .047 | | .500 | .520 | .025 | | 449 | 177 | .013 | .032 | .045 | 9C | X031 |
| 0037 | .374 | | .303 | | .060 | | .660 | .680 | .035 | | 755 | 248 | .016 | .042 | .058 | AM18W | 0037 |
| 0043 | .437 | | .343 | | .060 | | .687 | .710 | .035 | | 883 | 383 | .016 | .042 | .058 | AM19W | 0043 |
| X043 | .437 | | .380 | | .057 | | .600 | .620 | .035 | | 883 | 232 | .013 | .042 | .055 | AM20W | X043 |
| 0050 | .500 | +.120 +.000 | .396 | +.003 −.000 | .073 | | .800 | .820 | .042 | | 1210 | 485 | .022 | .049 | .071 | AM21W | 0050 |
| 0062 | .625 | | .485 | | .077 | | .940 | .960 | .042 | | 1510 | 816 | .026 | .049 | .075 | AM22W | 0062 |
| X074 | .744 | | .625 | | .085 | | 1.000 | 1.020 | .050 | | 2150 | 826 | .026 | .057 | .083 | AM23W | X074 |
| 0075 | .748 | | .580 | | .085 | | 1.120 | 1.140 | .050 | | 2160 | 1170 | .026 | .057 | .083 | AM24W | 0075 |
| 0087 | .874 | | .675 | | .085 | | 1.300 | 1.320 | .050 | | 2520 | 1620 | .026 | .057 | .083 | AM25W | 0087 |
| X098 | .984 | | .835 | | .085 | | 1.500 | 1.530 | .050 | | 2840 | 1370 | .026 | .057 | .083 | AM26W | X098 |
| X118 | 1.188 | | 1.079 | +.005 −.000 | .107 | +.004 −.000 | 1.626 | 1.670 | .062 | ±.003 | 4250 | 1210 | .034 | .070 | .104 | — | X118 |
| X137 | 1.375 | | 1.230 | | .107 | | 1.875 | 1.920 | .062 | | 4920 | 1860 | .034 | .070 | .104 | — | X137 |

Standard material - carbon spring steel. Standard finish - phosphate and oil.

# VARIANTS OF SERIES 'E' CIRCLIPS
## N1540 (Reinforced)

Equivalent to MIL-R-21248/MS 3215

All dimensions in inches

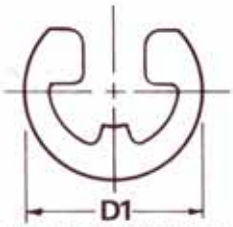


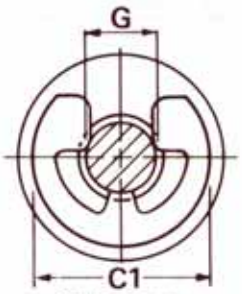


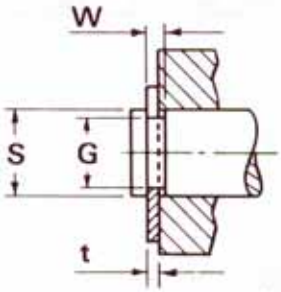


† Thrust load calculations see pages 9 & 10

Circlip in groove

| SIZE CODE | Shaft (S) S | Shaft (S) Tol. | Groove (G) G | Groove (G) Tol. | Groove (G) W | Groove (G) Tol. | Circlip (F) D1 | Circlip (F) C1 | Circlip (F) t | Circlip (F) Tol. | Tc† (lb.f) | Tg† (lb.f) | Appli-cator | Base | SIZE CODE |
|---|---|---|---|---|---|---|---|---|---|---|---|---|---|---|---|
| 0009 | .094 | +.015 −.000 | .074 | +.002 −.000 | .018 | +.002 −.000 | .206 | .219 | .015 | ±.002 | 80 | 17 | AM8 | SF30 | 0009 |
| 0012 | .125 | | .095 | | .018 | | .270 | .283 | .015 | | 110 | 35 | AM31 | SF31 | 0012 |
| 0015 | .156 | +.050 −.000 | .116 | | .029 | +.003 −.000 | .335 | .350 | .025 | | 220 | 58 | AM14 | SF32 | 0015 |
| 0018 | .188 | | .147 | | .029 | | .375 | .390 | .025 | | 270 | 72 | AM33 | SF33 | 0018 |
| 0021 | .219 | | .188 | ±.002 | .029 | | .446 | .460 | .025 | | 320 | 63 | AM15 | SF34 | 0021 |
| 0025 | .250 | | .210 | | .029 | | .516 | .530 | .025 | | 360 | 93 | AM16 | SF35 | 0025 |
| 0031 | .312 | | .250 | ±.003 | .039 | | .588 | .610 | .035 | | 630 | 180 | AM20 | SF36 | 0031 |
| 0037 | .375 | | .303 | | .039 | | .660 | .680 | .035 | | 760 | 250 | AM18 | SF37 | 0037 |
| 0043 | .438 | +.100 −.000 | .343 | | .039 | | .746 | .777 | .035 | | 880 | 390 | AM38 | SF38 | 0043 |
| 0050 | .500 | | .396 | | .046 | | .810 | .830 | .042 | | 1210 | 480 | AM21 | SF39 | 0050 |
| 0056 | .562 | | .437 | | .046 | | .870 | .890 | .042 | | 1360 | 650 | AM40 | SF40 | 0056 |

Standard material - carbon spring steel. Standard finish - phosphate and oil.

# VARIANTS OF SERIES ‘E’ CIRCLIPS N1800

Incorporating BS3673.3
Equivalent to MIL-R-21248/MS 16632

All dimensions in inches

† Thrust load calculations see pages 9 & 10

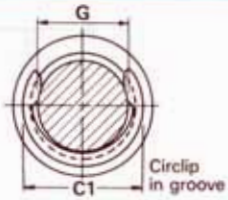


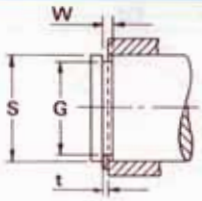


| SIZE CODE | B.S. Ref. | Shaft (S) S | Shaft (S) Tol. | Groove (G) G | Groove (G) Tol. | Groove (G) W | Groove (G) Tol. | Circlip (F) D1 | Circlip (F) C1 | Circlip (F) t | Circlip (F) Tol. | Tc† (lb.f) | Tg† (lb.f) | Appli-cator | Base | SIZE CODE |
|---|---|---|---|---|---|---|---|---|---|---|---|---|---|---|---|---|
| 0012 | C0012 | .125 | +.003 −.000 | .106 | ±.0015 | .018 | +.002 −.000 | .165 | .18 | .015 | ±.002 | 123 | 34 | AM50 | SF50 | 0012 |
| 0015 | C0015 | .156 | | .135 | | .018 | | .205 | .22 | .015 | | 153 | 46 | AM8 | SF51 | 0015 |
| 0018 | C0018 | .188 | | .165 | | .018 | | .244 | .25 | .015 | | 185 | 61 | AM10 | SF52 | 0018 |
| 0021 | C0021 | .219 | +.004 −.000 | .193 | ±.002 | .029 | +.003 −.000 | .275 | .29 | .025 | | 359 | 80 | AM53 | SF53 | 0021 |
| 0023 | C0023 | .236 | | .208 | | .029 | | .295 | .31 | .025 | | 387 | 93 | AM54 | SF54 | 0023 |
| 0025 | C0025 | .250 | | .220 | | .029 | | .311 | .33 | .025 | | 410 | 106 | AM12 | SF55 | 0025 |
| 0028 | C0028 | .281 | | .247 | | .029 | | .346 | .36 | .025 | | 461 | 135 | AM56 | SF56 | 0028 |
| 0031 | C0031 | .312 | | .276 | | .029 | | .376 | .39 | .025 | | 511 | 159 | AM13 | SF57 | 0031 |
| 0037 | C0037 | .375 | | .335 | | .029 | | .448 | .47 | .025 | | 615 | 212 | AM58 | SF58 | 0037 |
| 0040 | C0040 | .406 | | .364 | | .029 | | .486 | .50 | .025 | | 665 | 241 | AM59 | SF59 | 0040 |
| 0043 | C0043 | .438 | +.006 −.000 | .393 | ±.003 | .029 | | .517 | .53 | .025 | | 718 | 279 | AM16 | SF60 | 0043 |
| 0050 | C0050 | .500 | | .450 | | .039 | | .581 | .60 | .035 | | 1150 | 353 | AM61 | SF61 | 0050 |
| 0056 | C0056 | .562 | | .507 | | .039 | | .653 | .67 | .035 | | 1290 | 437 | AM18 | SF62 | 0056 |
| 0062 | C0062 | .625 | | .563 | | .039 | | .715 | .74 | .035 | | 1430 | 548 | AM38 | SF63 | 0062 |
| 0068 | C0068 | .688 | | .619 | | .046 | | .784 | .80 | .042 | | 1890 | 671 | AM64 | SF64 | 0068 |
| 0075 | C0075 | .750 | | .676 | | .046 | | .845 | .87 | .042 | | 2070 | 785 | AM40 | SF65 | 0075 |
| 0081 | C0081 | .812 | | .732 | | .046 | | .915 | .94 | .042 | | 2240 | 918 | AM66 | SF66 | 0081 |
| 0087 | C0087 | .875 | | .789 | | .046 | | .991 | 1.01 | .042 | | 2410 | 1060 | AM67 | SF67 | 0087 |
| 0093 | C0093 | .938 | | .843 | | .046 | | 1.058 | 1.08 | .042 | | 2580 | 1260 | AM68 | SF68 | 0093 |
| 0100 | C0100 | 1.000 | | .900 | | .046 | | 1.130 | 1.15 | .042 | | 2750 | 1410 | AM69 | SF69 | 0100 |
| 0112 | — | 1.125 | +.008 −.000 | 1.013 | ±.004 | .056 | +.004 −.000 | 1.267 | 1.30 | .050 | | 3690 | 1780 | — | — | 0112 |
| 0118 | — | 1.188 | | 1.047 | | .056 | | 1.321 | 1.35 | .050 | | 3890 | 2370 | — | — | 0118 |
| 0125 | — | 1.250 | | 1.126 | | .056 | | 1.415 | 1.44 | .050 | | 4100 | 2190 | — | — | 0125 |
| 0137 | — | 1.375 | | 1.237 | | .056 | | 1.555 | 1.58 | .050 | | 4510 | 2680 | — | — | 0137 |
| 0150 | — | 1.500 | | 1.350 | | .056 | | 1.691 | 1.72 | .050 | | 4920 | 3180 | — | — | 0150 |
| 0175 | — | 1.750 | +.010 −.000 | 1.576 | ±.005 | .068 | | 1.975 | 2.01 | .062 | ±.003 | 7110 | 4300 | — | — | 0175 |
| 0200 | — | 2.000 | | 1.800 | | .068 | | 2.257 | 2.30 | .062 | | 8130 | 5650 | — | — | 0200 |

Standard material - carbon spring steel. Standard finish - phosphate and oil.

# A1500 ‘U’, ‘C’ & ‘S’

All dimensions in inches

Sizes marked • are only produced to order, details on enquiry.

See page 26 for applications

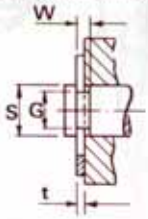


† Thrust load calculations see pages 9 & 10

| | SIZE CODE | Shaft (S) S | Shaft (S) Tol. | Groove (G) G | Groove (G) Tol. | Groove (G) W | Groove (G) Tol. | Circlip (F) D1 | Circlip (F) C1 | Circlip (F) t | Circlip (F) Tol. | Tc† (lb.f) | Tg† (lb.f) | Appli-cator | Base | SIZE CODE |
|---|---|---|---|---|---|---|---|---|---|---|---|---|---|---|---|---|
| • | U078 | .110 | +.040 −.000 | .078 | +.002 −.000 | .023 | +.003 −.000 | .426 | .430 | .020 | ±.0015 | 231 | 60 | 80 | DR78U | U078 |
| | U095 | .125 | | .095 | | .023 | | .374 | .380 | .020 | | 262 | 64 | 4B | DR95U | U095 |
| • | U125 | .172 | | .125 | | .023 | | .500 | .510 | .020 | | 361 | 137 | 6B | SR125U | U125 |
| | U187 | .218 | +.100 −.000 | .187 | | .023 | | .688 | .700 | .020 | | 457 | 115 | 29 | SR187U | U187 |
| | U281 | .343 | | .281 | | .023 | | .780 | .790 | .020 | | 720 | 361 | 10A | FR281U | U281 |
| | C086 | .110 | +.040 −.000 | .086 | +.002 −.000 | .025 | +.002 −.000 | .282 | .297 | .022 | ±.002 | 289 | 45 | 4B | QL86C | C086 |
| | C120 | .156 | | .120 | | .027 | | .320 | .336 | .024 | | 393 | 95 | AM14 | FR120C | C120 |
| • | C124 | .156 | | .124 | | .017 | | .406 | .422 | .015 | ±.0015 | 245 | 85 | 7A | QL124C | C124 |
| • | C175 | .218 | +.100 −.000 | .175 | | .017 | | .500 | .517 | .015 | | 343 | 159 | 9A | FR175C | C175 |
| | C181 | .218 | | .181 | | .031 | | .430 | .447 | .028 | ±.002 | 640 | 137 | AM15 | FR181C | C181 |
| • | C249 | .312 | | .249 | | .017 | | .625 | .642 | .015 | ±.0015 | 491 | 333 | 16A | FR249C | C249 |
| • | S052 | .078 | +.030 −.000 | .052 | +.002 −.000 | .017 | +.002 −.000 | .250 | .265 | .015 | ±.0015 | 123 | 34 | AM10 | DR52S | S052 |
| • | S062 | .078 | | .062 | | .028 | | .295 | .305 | .025 | | 205 | 21 | AM11 | DR62S | S062 |
| • | S091 | .125 | | .091 | | .025 | | .281 | .291 | .022 | | 289 | 72 | 4B | DR91S | S091 |
| | S102 | .125 | +.060 −.000 | .102 | | .017 | | .376 | .391 | .015 | | 197 | 49 | AM6 | DR102S | S102 |
| • | S120 | .156 | | .120 | | .027 | | .320 | .336 | .024 | | 393 | 95 | AM14 | DR120S | S120 |
| • | S126 | .188 | +.075 −.000 | .126 | +.003 −.000 | .027 | +.003 −.000 | .350 | .365 | .024 | ±.002 | 473 | 198 | AM56 | DR126S | S126 |
| | S389 | .468 | | .389 | | .031 | | .687 | .705 | .028 | | 1375 | 627 | 12A | — | S389 |

Standard material - carbon spring steel. Standard finish - phosphate and oil.

All dimensions in mm

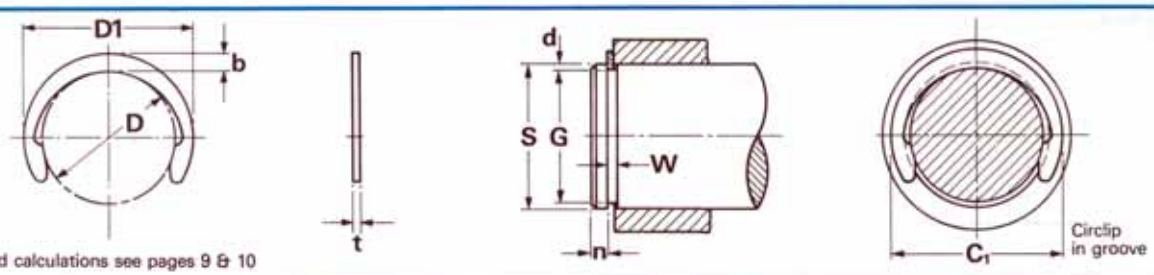


† Thrust load calculations see pages 9 & 10

| SIZE CODE | Shaft (S) S | Tol. | Groove (G) G | Tol. | W | Tol. | d | n | Circlip (F) t | Tol. | D | Tol. | D1 | b | C1 | Wt. kg/k | Tc† (N) | Tg† (N) | SIZE CODE |
|---|---|---|---|---|---|---|---|---|---|---|---|---|---|---|---|---|---|---|---|
| 0030 | 3 | +0.08 −0.00 | 2.3 | +0.00 −0.07 | 0.44 | +0.05 −0.00 | 0.35 | 1.0 | 0.40 | +0.00 −0.05 | 2.18 | ±0.06 | 3.96 | 0.90 | 4.1 | 0.02 | 500 | 240 | 0030 |
| 0040 | 4 | | 3.2 | | 0.44 | | 0.40 | 1.2 | 0.40 | | 3.00 | | 5.00 | 1.00 | 5.2 | 0.04 | 500 | 370 | 0040 |
| 0050 | 5 | +0.10 −0.00 | 4.0 | | 0.64 | +0.08 −0.00 | 0.50 | 1.5 | 0.60 | | 3.80 | ±0.08 | 6.20 | 1.20 | 6.4 | 0.08 | 1100 | 580 | 0050 |
| 0060 | 6 | | 5.0 | | 0.74 | | 0.50 | 1.5 | 0.70 | | 4.80 | | 7.40 | 1.30 | 7.6 | 0.11 | 1650 | 720 | 0060 |
| 0065 | 6.5 | | 5.8 | | 0.74 | | 0.35 | 1.0 | 0.70 | | 5.60 | | 8.20 | 1.30 | 8.4 | 0.12 | 1700 | 550 | 0065 |
| 0070 | 7 | | 6.0 | +0.00 −0.09 | 0.85 | | 0.50 | 1.5 | 0.80 | | 5.80 | | 8.60 | 1.40 | 8.8 | 0.13 | 2200 | 850 | 0070 |
| 0080 | 8 | | 7.0 | | 0.85 | | 0.50 | 1.5 | 0.80 | | 6.80 | ±0.09 | 10.00 | 1.60 | 10.2 | 0.17 | 2200 | 960 | 0080 |
| 0090 | 9 | | 8.0 | | 1.10 | | 0.50 | 1.5 | 1.00 | +0.00 −0.06 | 7.80 | | 11.20 | 1.70 | 11.4 | 0.22 | 3500 | 1100 | 0090 |
| 0100 | 10 | | 9.0 | | 1.10 | | 0.50 | 1.5 | 1.00 | | 8.75 | | 12.15 | 1.70 | 12.4 | 0.26 | 3700 | 1240 | 0100 |
| 0110 | 11 | | 10.0 | +0.00 −0.11 | 1.10 | | 0.50 | 1.5 | 1.00 | | 9.65 | ±0.18 | 13.20 | 1.80 | 13.6 | 0.29 | 4000 | 1350 | 0110 |
| 0120 | 12 | +0.15 −0.00 | 10.9 | | 1.10 | | 0.55 | 1.7 | 1.00 | | 10.55 | | 14.35 | 1.90 | 14.7 | 0.32 | 4200 | 1650 | 0120 |
| 0130 | 13 | | 11.8 | | 1.10 | | 0.60 | 1.8 | 1.00 | | 11.40 | | 15.40 | 2.00 | 15.8 | 0.36 | 4500 | 1900 | 0130 |
| 0140 | 14 | | 12.7 | | 1.10 | | 0.65 | 2.0 | 1.00 | | 12.30 | | 16.30 | 2.00 | 16.7 | 0.40 | 5000 | 2200 | 0140 |
| 0150 | 15 | | 13.6 | | 1.10 | | 0.70 | 2.1 | 1.00 | | 13.20 | | 17.40 | 2.10 | 17.8 | 0.46 | 5500 | 2600 | 0150 |
| 0160 | 16 | | 14.5 | | 1.10 | | 0.75 | 2.3 | 1.00 | | 14.10 | | 18.50 | 2.20 | 18.9 | 0.54 | 5800 | 3000 | 0160 |
| 0170 | 17 | | 15.4 | | 1.10 | +0.15 −0.00 | 0.80 | 2.4 | 1.00 | | 14.90 | | 19.40 | 2.25 | 19.9 | 0.64 | 6000 | 3400 | 0170 |
| 0180 | 18 | | 16.3 | | 1.30 | | 0.85 | 2.6 | 1.20 | | 15.80 | | 20.40 | 2.30 | 20.9 | 0.72 | 8500 | 3700 | 0180 |
| 0190 | 19 | | 17.2 | | 1.30 | | 0.90 | 2.7 | 1.20 | | 16.70 | | 21.50 | 2.40 | 22.0 | 0.80 | 9000 | 4300 | 0190 |
| 0200 | 20 | | 18.1 | +0.00 −0.21 | 1.30 | | 0.95 | 2.9 | 1.20 | | 17.55 | | 22.65 | 2.55 | 23.2 | 0.87 | 9400 | 4700 | 0200 |
| 0220 | 22 | | 19.9 | | 1.30 | | 1.05 | 3.2 | 1.20 | | 19.40 | ±0.21 | 25.00 | 2.80 | 25.5 | 1.10 | 10000 | 5700 | 0220 |
| 0230 | 23 | | 20.8 | | 1.30 | | 1.10 | 3.3 | 1.20 | | 20.20 | | 26.00 | 2.90 | 26.6 | 1.15 | 10500 | 6200 | 0230 |
| 0240 | 24 | | 21.7 | | 1.30 | | 1.15 | 3.5 | 1.20 | | 21.10 | | 27.10 | 3.00 | 27.7 | 1.52 | 11000 | 6800 | 0240 |
| 0250 | 25 | | 22.6 | | 1.30 | | 1.20 | 3.6 | 1.20 | | 22.00 | | 28.30 | 3.15 | 28.9 | 1.74 | 11500 | 7500 | 0250 |
| 0260 | 26 | +0.20 −0.00 | 23.5 | | 1.30 | | 1.25 | 3.8 | 1.20 | | 22.90 | | 29.40 | 3.25 | 30.0 | 1.88 | 12000 | 8000 | 0260 |
| 0280 | 28 | | 25.2 | | 1.60 | | 1.40 | 4.2 | 1.50 | | 24.60 | | 31.60 | 3.50 | 32.2 | 2.32 | 16500 | 9700 | 0280 |
| 0300 | 30 | | 27.0 | | 1.60 | | 1.50 | 4.5 | 1.50 | | 26.30 | | 33.70 | 3.70 | 34.4 | 2.43 | 17000 | 11000 | 0300 |

Standard material - carbon spring steel. Standard finish - phosphate and oil.

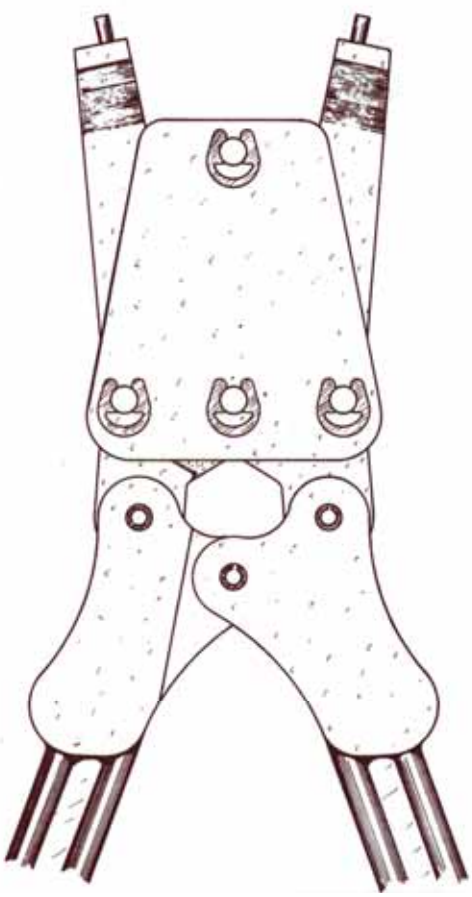

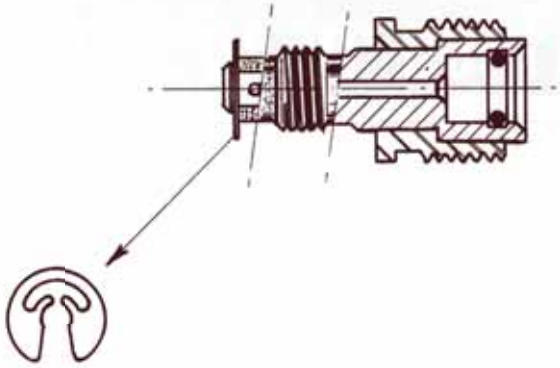

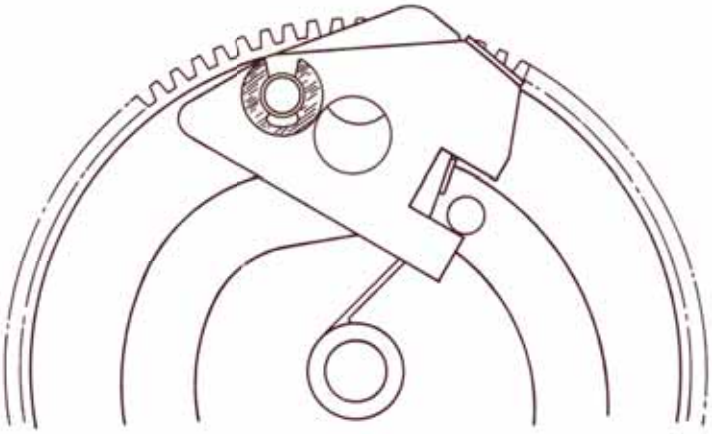

All dimensions in mm

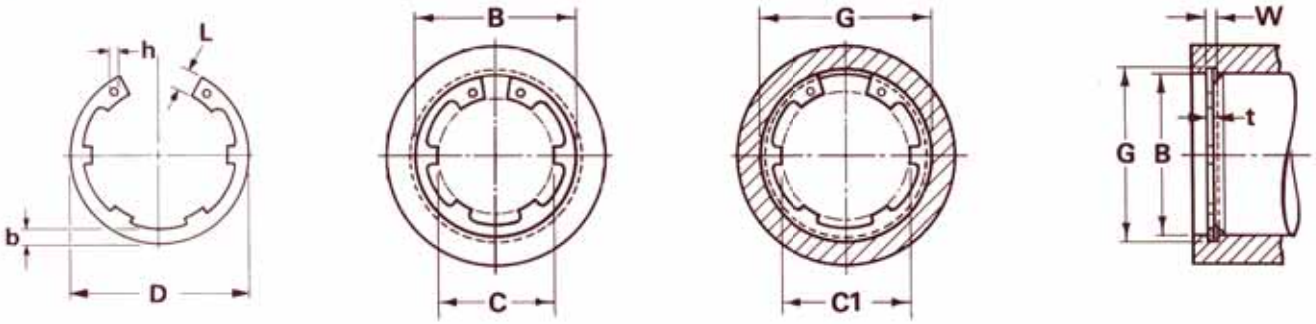


Circlip in bore

Circlip in groove

† Thrust load calculations see pages 9 & 10

| SIZE CODE | Bore (B) | Groove (G) | | | | | | Circlip (F) | | | | | | | | | Tc† | Tg† | SIZE CODE |
|---|---|---|---|---|---|---|---|---|---|---|---|---|---|---|---|---|---|---|---|
| | B | G | Tol | W | Tol | n (min) | d ~ | t | Tol | D | Tol | C | C1 | L (max) | b ~ | h (min) | (N) | (N) | |
| 0160 | 16 | 16.8 | +0.11 −0.00 | 1.10 | | 1.2 | .040 | 1.00 | | 17.3 | | 9.0 | 10.0 | 3.4 | 2.1 | 1.7 | 15600 | 2410 | 0160 |
| 0170 | 17 | 17.8 | | 1.10 | | 1.2 | .040 | 1.00 | | 18.3 | | 9.4 | 10.4 | 3.7 | 2.2 | 1.7 | 16600 | 2560 | 0170 |
| 0180 | 18 | 19.0 | | 1.10 | | 1.5 | .050 | 1.00 | | 19.5 | | 9.6 | 10.8 | 4.1 | 2.3 | 2.0 | 17500 | 3390 | 0180 |
| 0190 | 19 | 20.0 | +0.15 −0.00 | 1.10 | | 1.5 | .050 | 1.00 | | 20.5 | +0.42 −0.13 | 11.2 | 12.4 | 3.8 | 2.3 | 2.0 | 18500 | 3580 | 0190 |
| 0200 | 20 | 21.0 | | 1.10 | | 1.5 | .050 | 1.00 | | 21.5 | | 12.0 | 13.2 | 3.9 | 2.4 | 2.0 | 19500 | 3770 | 0200 |
| 0210 | 21 | 22.0 | | 1.10 | | 1.5 | .050 | 1.00 | | 22.5 | | 12.8 | 14.0 | 4.0 | 2.4 | 2.0 | 20400 | 3960 | 0210 |
| 0220 | 22 | 23.0 | | 1.10 | | 1.5 | .050 | 1.00 | | 23.5 | | 13.8 | 15.0 | 4.0 | 2.6 | 2.0 | 21400 | 4150 | 0220 |
| 0230 | 23 | 24.1 | | 1.30 | | 1.6 | .055 | 1.20 | | 24.6 | | 14.6 | 15.9 | 4.1 | 2.6 | 2.0 | 26900 | 4770 | 0230 |
| 0240 | 24 | 25.2 | +0.21 −0.00 | 1.30 | | 1.8 | .060 | 1.20 | | 25.9 | +0.42 −0.21 | 15.4 | 16.8 | 4.2 | 2.6 | 2.0 | 28000 | 5430 | 0240 |
| 0250 | 25 | 26.2 | | 1.30 | | 1.8 | .060 | 1.20 | | 26.9 | | 16.0 | 17.4 | 4.4 | 2.8 | 2.0 | 29200 | 5650 | 0250 |
| 0260 | 26 | 27.2 | | 1.30 | | 1.8 | .060 | 1.20 | | 28.5 | | 17.0 | 18.4 | 4.4 | 2.8 | 2.0 | 30400 | 5880 | 0260 |
| 0270 | 27 | 28.4 | | 1.30 | | 2.1 | .070 | 1.20 | | 29.1 | | 17.8 | 19.4 | 4.5 | 2.9 | 2.0 | 31600 | 7130 | 0270 |
| 0280 | 28 | 29.4 | | 1.30 | | 2.1 | .070 | 1.20 | | 30.1 | | 18.0 | 19.6 | 4.9 | 3.0 | 2.0 | 32700 | 7390 | 0280 |
| 0300 | 30 | 31.4 | | 1.30 | | 2.1 | .070 | 1.20 | +0.00 −0.06 | 32.1 | | 20.0 | 21.6 | 4.9 | 3.2 | 2.0 | 35100 | 7920 | 0300 |
| 0310 | 31 | 32.7 | | 1.30 | | 2.5 | .085 | 1.20 | | 33.4 | | 20.8 | 22.7 | 5.0 | 3.2 | 2.5 | 36200 | 9930 | 0310 |
| 0320 | 32 | 33.7 | | 1.30 | | 2.5 | 0.85 | 1.20 | | 34.4 | +0.50 −0.25 | 21.5 | 23.5 | 5.1 | 3.3 | 2.5 | 37400 | 10300 | 0320 |
| 0330 | 33 | 34.7 | | 1.30 | | 2.5 | 0.85 | 1.20 | | 35.5 | | 22.5 | 24.5 | 5.1 | 3.3 | 2.5 | 38600 | 10600 | 0330 |
| 0340 | 34 | 35.7 | | 1.60 | | 2.5 | 0.85 | 1.50 | | 36.5 | | 23.1 | 25.1 | 5.3 | 3.4 | 2.5 | 49700 | 10900 | 0340 |
| 0350 | 35 | 37.0 | +0.25 −0.00 | 1.60 | +0.14 −0.00 | 3.0 | 1.00 | 1.50 | | 37.8 | | 23.7 | 26.0 | 5.5 | 3.6 | 2.5 | 51100 | 13200 | 0350 |
| 0360 | 36 | 38.0 | | 1.60 | | 3.0 | 1.00 | 1.50 | | 38.8 | | 24.5 | 26.8 | 5.6 | 3.6 | 2.5 | 52600 | 13600 | 0360 |
| 0380 | 38 | 40.0 | | 1.60 | | 3.0 | 1.00 | 1.50 | | 40.8 | | 25.5 | 27.8 | 6.1 | 3.8 | 2.5 | 55500 | 14300 | 0380 |
| 0400 | 40 | 42.5 | | 1.85 | | 3.8 | 1.25 | 1.75 | | 43.5 | | 25.2 | 28.1 | 7.2 | 4.0 | 2.5 | 56600 | 18800 | 0400 |
| 0420 | 42 | 44.5 | | 1.85 | | 3.8 | 1.25 | 1.75 | | 45.5 | +0.90 −0.39 | 27.2 | 30.1 | 7.2 | 4.1 | 2.5 | 59500 | 19800 | 0420 |
| 0440 | 44 | 46.5 | | 1.85 | | 3.8 | 1.25 | 1.75 | | 47.5 | | 29.3 | 32.1 | 7.2 | 4.2 | 2.5 | 62300 | 20700 | 0440 |
| 0450 | 45 | 47.5 | | 1.85 | | 3.8 | 1.25 | 1.75 | | 48.5 | | 30.3 | 33.1 | 7.2 | 4.3 | 2.5 | 63700 | 21200 | 0450 |
| 0470 | 47 | 49.5 | | 1.85 | | 3.8 | 1.25 | 1.75 | | 50.5 | | 32.3 | 35.1 | 7.2 | 4.5 | 2.5 | 66500 | 22100 | 0470 |
| 0480 | 48 | 50.5 | | 1.85 | | 3.8 | 1.25 | 1.75 | | 51.5 | | 33.3 | 36.1 | 7.2 | 4.5 | 2.5 | 68000 | 22600 | 0480 |
| 0500 | 50 | 53.0 | | 2.15 | | 4.5 | 1.50 | 2.00 | | 54.2 | | 33.3 | 36.6 | 8.2 | 4.7 | 2.5 | 80900 | 28300 | 0500 |
| 0520 | 52 | 55.0 | | 2.15 | | 4.5 | 1.50 | 2.00 | | 56.2 | | 35.2 | 38.6 | 8.2 | 4.7 | 2.5 | 84100 | 29400 | 0520 |
| 0550 | 55 | 58.0 | | 2.15 | | 4.5 | 1.50 | 2.00 | | 59.2 | | 38.2 | 41.6 | 8.2 | 5.1 | 2.5 | 89000 | 31100 | 0550 |
| 0570 | 57 | 60.0 | | 2.15 | | 4.5 | 1.50 | 2.00 | | 61.2 | | 40.2 | 43.6 | 8.2 | 5.2 | 2.5 | 92200 | 32200 | 0570 |
| 0580 | 58 | 61.0 | +0.30 −0.00 | 2.15 | | 4.5 | 1.50 | 2.00 | | 62.2 | +1.10 −0.46 | 41.2 | 44.6 | 8.2 | 5.3 | 2.5 | 93800 | 32800 | 0580 |
| 0600 | 60 | 63.0 | | 2.15 | | 4.5 | 1.50 | 2.00 | +0.00 −0.07 | 64.2 | | 43.2 | 46.6 | 8.2 | 5.5 | 2.5 | 97100 | 33900 | 0600 |
| 0620 | 62 | 65.0 | | 2.15 | | 4.5 | 1.50 | 2.00 | | 66.2 | | 45.2 | 48.6 | 8.2 | 5.6 | 2.5 | 100000 | 35100 | 0620 |
| 0650 | 65 | 68.0 | | 2.65 | | 4.5 | 1.50 | 2.50 | | 69.2 | | 44.1 | 47.6 | 10.2 | 5.8 | 3.0 | 131000 | 36800 | 0650 |
| 0670 | 67 | 70.0 | | 2.65 | | 4.5 | 1.50 | 2.50 | | 71.5 | | 46.1 | 49.6 | 10.2 | 6.0 | 3.0 | 136000 | 37900 | 0670 |
| 0680 | 68 | 71.0 | | 2.65 | | 4.5 | 1.50 | 2.50 | | 72.5 | | 47.1 | 50.6 | 10.2 | 6.1 | 3.0 | 138000 | 38500 | 0680 |
| 0700 | 70 | 73.0 | | 2.65 | | 4.5 | 1.50 | 2.50 | | 74.5 | | 49.1 | 52.6 | 10.2 | 6.2 | 3.0 | 142000 | 39600 | 0700 |
| 0720 | 72 | 75.0 | | 2.65 | | 4.5 | 1.50 | 2.50 | | 76.5 | | 51.1 | 54.6 | 10.2 | 6.4 | 3.0 | 146000 | 40700 | 0720 |
| 0750 | 75 | 78.0 | | 2.65 | | 4.5 | 1.50 | 2.50 | | 79.5 | | 54.1 | 57.6 | 10.2 | 6.6 | 3.0 | 152000 | 42400 | 0750 |
| 0800 | 80 | 83.5 | | 2.65 | | 5.3 | 1.75 | 2.50 | | 85.5 | | 59.1 | 63.1 | 10.2 | 7.0 | 3.0 | 162000 | 52800 | 0800 |
| 0850 | 85 | 88.5 | +0.35 −0.00 | 3.15 | | 5.3 | 1.75 | 3.00 | | 90.5 | | 60.1 | 64.1 | 12.2 | 7.4 | 3.5 | 206000 | 56100 | 0850 |
| 0900 | 90 | 93.5 | | 3.15 | | 5.3 | 1.75 | 3.00 | | 95.5 | | 65.1 | 69.1 | 12.2 | 7.7 | 3.5 | 218000 | 59400 | 0900 |
| 0950 | 95 | 98.5 | | 3.15 | +0.18 −0.00 | 5.3 | 1.75 | 3.00 | +0.00 −0.08 | 100.5 | +1.30 −0.54 | 70.1 | 74.1 | 12.2 | 8.1 | 3.5 | 231000 | 62700 | 0950 |
| 1000 | 100 | 103.5 | | 3.15 | | 5.3 | 1.75 | 3.00 | | 105.5 | | 75.1 | 79.1 | 12.2 | 8.5 | 3.5 | 243000 | 66000 | 1000 |
| 1100 | 110 | 114.0 | +0.54 −0.00 | 4.15 | | 6.0 | 2.00 | 4.00 | +0.00 −0.10 | 117.0 | | 85.1 | 89.6 | 12.2 | 9.0 | 3.5 | 256000 | 82900 | 1100 |

Standard material - carbon spring steel. Standard finish - phosphate and oil.

All dimensions in mm

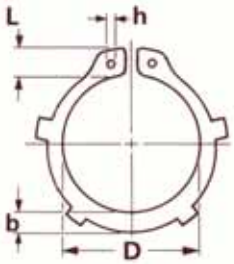


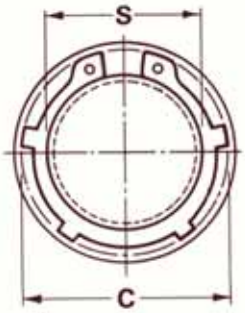


Circlip on shaft

Circlip in groove

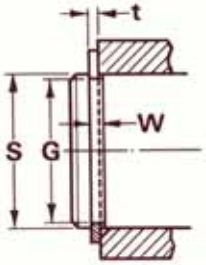


† Thrust load calculations see pages 9 & 10

| SIZE CODE | Shaft (S) | Groove (G) | | | | | | Circlip (F) | | | | | | | | | Tc† | Tg† | SIZE CODE |
|---|---|---|---|---|---|---|---|---|---|---|---|---|---|---|---|---|---|---|---|
| | S | G | Tol | W | Tol | n (min) | d ~ | t | Tol | D | Tol | C | C1 | L (max) | b ~ | h (min) | (N) | (N) | |
| 0160 | 16 | 15.2 | +0.00 −0.11 | 1.10 | +0.14 −0.00 | 1.2 | 0.40 | 1.00 | +0.00 −0.06 | 14.7 | +0.10 −0.36 | 23.2 | 22.2 | 3.5 | 2.3 | 1.7 | 15600 | 2410 | 0160 |
| 0170 | 17 | 16.2 | | 1.10 | | 1.2 | 0.40 | 1.00 | | 15.7 | | 24.4 | 23.4 | 3.6 | 2.4 | 1.7 | 16600 | 2560 | 0170 |
| 0180 | 18 | 17.0 | | 1.30 | | 1.5 | 0.50 | 1.20 | | 16.5 | | 25.6 | 24.4 | 3.7 | 2.5 | 2.0 | 21000 | 3390 | 0180 |
| 0190 | 19 | 18.0 | +0.00 −0.21 | 1.30 | | 1.5 | 0.50 | 1.20 | | 17.5 | | 26.6 | 25.4 | 3.7 | 2.6 | 2.0 | 22200 | 3580 | 0190 |
| 0200 | 20 | 19.0 | | 1.30 | | 1.5 | 0.50 | 1.20 | | 18.5 | +0.13 −0.42 | 27.8 | 26.6 | 3.8 | 2.6 | 2.0 | 23400 | 3770 | 0200 |
| 0220 | 22 | 21.0 | | 1.30 | | 1.5 | 0.50 | 1.20 | | 20.5 | | 30.2 | 29.0 | 4.0 | 2.8 | 2.0 | 25700 | 4150 | 0220 |
| 0230 | 23 | 22.0 | | 1.30 | | 1.5 | 0.50 | 1.20 | | 21.5 | | 31.4 | 30.2 | 4.1 | 2.9 | 2.0 | 26900 | 4340 | 0230 |
| 0240 | 24 | 22.9 | | 1.30 | | 1.6 | 0.55 | 1.20 | | 22.2 | +0.21 −0.42 | 32.6 | 31.3 | 4.2 | 3.0 | 2.0 | 28000 | 4980 | 0240 |
| 0250 | 25 | 23.9 | | 1.30 | | 1.6 | 0.55 | 1.20 | | 23.2 | | 33.8 | 32.5 | 4.3 | 3.0 | 2.0 | 29200 | 5180 | 0250 |
| 0260 | 26 | 24.9 | | 1.30 | | 1.6 | 0.55 | 1.20 | | 24.2 | | 35.0 | 33.7 | 4.4 | 3.1 | 2.0 | 30400 | 5390 | 0260 |
| 0280 | 28 | 26.6 | +0.00 −0.25 | 1.60 | | 2.1 | 0.70 | 1.50 | | 25.9 | | 37.3 | 35.6 | 4.5 | 3.3 | 2.0 | 40900 | 7390 | 0280 |
| 0290 | 29 | 27.6 | | 1.60 | | 2.1 | 0.70 | 1.50 | | 26.9 | | 38.7 | 37.0 | 4.7 | 3.4 | 2.0 | 42400 | 7650 | 0290 |
| 0300 | 30 | 28.5 | | 1.60 | | 2.1 | 0.70 | 1.50 | | 27.9 | | 39.7 | 37.9 | 4.7 | 3.4 | 2.0 | 43800 | 7920 | 0300 |
| 0320 | 32 | 30.3 | | 1.60 | | 2.5 | 0.85 | 1.50 | | 29.6 | | 42.4 | 40.3 | 5.0 | 3.6 | 2.5 | 46700 | 10300 | 0320 |
| 0340 | 34 | 32.3 | | 1.60 | | 2.5 | 0.85 | 1.50 | | 31.5 | | 44.6 | 42.5 | 5.1 | 3.8 | 2.5 | 49700 | 10900 | 0340 |
| 0350 | 35 | 33.0 | | 1.60 | | 3.0 | 1.00 | 1.50 | | 32.2 | | 45.8 | 43.4 | 5.2 | 3.8 | 2.5 | 51100 | 13200 | 0350 |
| 0370 | 37 | 35.0 | | 1.85 | | 3.0 | 1.00 | 1.75 | | 34.2 | +0.25 −0.50 | 48.2 | 45.8 | 5.4 | 4.0 | 2.5 | 51400 | 13600 | 0370 |
| 0380 | 38 | 36.0 | | 1.85 | | 3.0 | 1.00 | 1.75 | | 35.2 | | 49.4 | 47.0 | 5.5 | 4.1 | 2.5 | 54800 | 14300 | 0380 |
| 0400 | 40 | 37.5 | | 1.85 | | 3.8 | 1.25 | 1.75 | | 36.5 | | 54.9 | 51.9 | 7.2 | 4.2 | 2.5 | 56600 | 18800 | 0400 |
| 0420 | 42 | 39.5 | | 1.85 | | 3.8 | 1.25 | 1.75 | | 38.5 | | 56.9 | 53.9 | 7.2 | 4.5 | 2.5 | 59500 | 19800 | 0420 |
| 0450 | 45 | 42.5 | | 1.85 | | 3.8 | 1.25 | 1.75 | | 41.5 | +0.39 −0.90 | 59.9 | 56.9 | 7.2 | 4.6 | 2.5 | 63700 | 21200 | 0450 |
| 0470 | 47 | 44.5 | | 1.85 | | 3.8 | 1.25 | 1.75 | | 43.5 | | 61.9 | 58.9 | 7.2 | 4.8 | 2.5 | 66500 | 22100 | 0470 |
| 0480 | 48 | 45.5 | | 1.85 | | 3.8 | 1.25 | 1.75 | | 44.5 | | 62.9 | 59.9 | 7.2 | 4.9 | 2.5 | 67900 | 22600 | 0480 |
| 0500 | 50 | 47.0 | | 2.15 | | 4.5 | 1.50 | 2.00 | +0.00 −0.07 | 45.8 | | 67.0 | 63.4 | 8.2 | 5.0 | 2.5 | 80900 | 28300 | 0500 |
| 0550 | 55 | 52.0 | | 2.15 | | 4.5 | 1.50 | 2.00 | | 50.8 | +0.46 −1.10 | 72.0 | 68.4 | 8.2 | 5.4 | 2.5 | 89000 | 31100 | 0550 |
| 0570 | 57 | 54.0 | +0.00 −0.30 | 2.15 | | 4.5 | 1.50 | 2.00 | | 52.8 | | 74.0 | 70.4 | 8.2 | 5.6 | 2.5 | 90600 | 31700 | 0570 |
| 0580 | 58 | 55.0 | | 2.15 | | 4.5 | 1.50 | 2.00 | | 53.8 | | 75.0 | 71.4 | 8.2 | 5.7 | 2.5 | 93800 | 32800 | 0580 |
| 0600 | 60 | 57.0 | | 2.15 | | 4.5 | 1.50 | 2.00 | | 55.8 | | 77.0 | 73.4 | 8.2 | 5.8 | 2.5 | 97100 | 33900 | 0600 |
| 0620 | 62 | 59.0 | | 2.15 | | 4.5 | 1.50 | 2.00 | | 57.8 | | 79.0 | 75.4 | 8.2 | 5.9 | 2.5 | 100000 | 35100 | 0620 |
| 0650 | 65 | 62.0 | | 2.65 | | 4.5 | 1.50 | 2.50 | | 60.8 | | 86.0 | 82.4 | 10.2 | 6.2 | 3.0 | 131000 | 36800 | 0650 |
| 0670 | 67 | 64.0 | | 2.65 | | 4.5 | 1.50 | 2.50 | | 62.5 | | 88.0 | 84.4 | 10.2 | 6.4 | 3.0 | 136000 | 37900 | 0670 |
| 0680 | 68 | 65.0 | | 2.65 | | 4.5 | 1.50 | 2.50 | | 63.5 | | 89.0 | 85.4 | 10.2 | 6.5 | 3.0 | 138000 | 38500 | 0680 |
| 0700 | 70 | 67.0 | | 2.65 | | 4.5 | 1.50 | 2.50 | | 65.5 | | 91.0 | 87.4 | 10.2 | 6.6 | 3.0 | 142000 | 39600 | 0700 |
| 0750 | 75 | 72.0 | | 2.65 | | 4.5 | 1.50 | 2.50 | | 70.5 | | 96.2 | 92.4 | 10.2 | 7.0 | 3.0 | 152000 | 42400 | 0750 |
| 0800 | 80 | 76.5 | | 2.65 | | 5.3 | 1.75 | 2.50 | | 74.5 | | 101.2 | 96.9 | 10.2 | 7.4 | 3.0 | 162000 | 52800 | 0800 |
| 0850 | 85 | 81.5 | +0.00 −0.35 | 3.15 | +0.18 −0.00 | 5.3 | 1.75 | 3.00 | +0.00 −0.08 | 79.5 | +0.54 −1.30 | 106.2 | 101.9 | 10.2 | 7.8 | 3.5 | 206000 | 56100 | 0850 |
| 0900 | 90 | 86.5 | | 3.15 | | 5.3 | 1.75 | 3.00 | | 84.5 | | 111.2 | 106.9 | 10.2 | 8.2 | 3.5 | 218000 | 59400 | 0900 |
| 0950 | 95 | 91.5 | | 3.15 | | 5.3 | 1.75 | 3.00 | | 89.5 | | 116.2 | 111.9 | 10.2 | 8.6 | 3.5 | 231000 | 62700 | 0950 |
| 1000 | 100 | 96.5 | | 3.15 | | 5.3 | 1.75 | 3.00 | | 94.6 | | 121.4 | 116.9 | 10.2 | 9.0 | 3.5 | 243000 | 66000 | 1000 |
| 1100 | 110 | 106.0 | +0.00 −0.54 | 4.15 | | 6.0 | 2.00 | 4.00 | +0.00 −0.10 | 103.0 | | 135.4 | 130.4 | 12.2 | 9.6 | 3.5 | 356000 | 82900 | 1100 |

Standard material - carbon spring steel. Standard finish - phosphate and oil.

All dimensions in mm

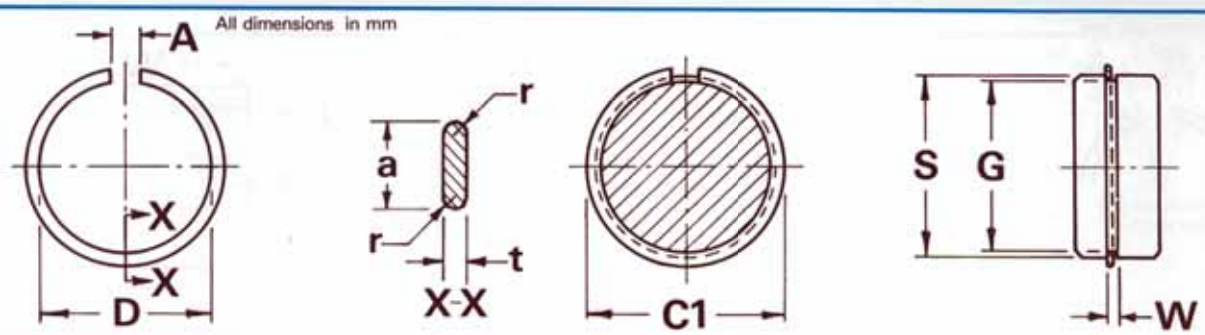


† Thrust load calculations see pages 9 & 10

| SIZE CODE | Brg. S | Groove (G) G | Tol | W | Tol | Circlip (F) D | Tol | a | Tol | t | Tol | C1 | A~ | r (min) | Tc† (N) | Bearing No. Light | Medium | Heavy |
|---|---|---|---|---|---|---|---|---|---|---|---|---|---|---|---|---|---|---|
| 0300 | 30 | 28.17 | | 1.35 | | 27.4 | | 3.25 | | 1.12 | | 34.7 | 3 | 0.4 | 23000 | 6200 | – | – |
| 0320 | 32 | 30.15 | | 1.35 | | 29.4 | +0.40 | 3.25 | | 1.12 | | 36.7 | 3 | 0.4 | 24500 | 6201 | – | – |
| 0350 | 35 | 33.17 | | 1.35 | | 32.4 | −0.00 | 3.25 | | 1.12 | | 39.7 | 3 | 0.4 | 26800 | 6202 | 6300 | – |
| 0370 | 37 | 34.77 | | 1.35 | | 34.0 | | 3.25 | | 1.12 | | 41.3 | 3 | 0.4 | 28300 | – | 6301 | – |
| 0400 | 40 | 38.10 | | 1.35 | | 37.3 | | 3.25 | | 1.12 | | 44.6 | 3 | 0.4 | 30600 | 6203 | – | – |
| 0420 | 42 | 39.75 | | 1.35 | | 38.9 | | 3.25 | | 1.12 | | 46.3 | 3 | 0.4 | 32100 | – | 6302 | |
| 0440 | 44 | 41.75 | +0.00 | 1.35 | | 40.9 | | 3.25 | | 1.12 | | 48.3 | 3 | 0.4 | 33700 | – | – | – |
| 0470 | 47 | 44.60 | −0.25 | 1.35 | | 43.7 | +0.50 | 4.04 | | 1.12 | | 52.7 | 4 | 0.4 | 36000 | 6204 | 6303 | – |
| 0500 | 50 | 47.60 | | 1.35 | | 46.7 | −0.00 | 4.04 | | 1.12 | | 55.7 | 4 | 0.4 | 38300 | – | – | – |
| 0520 | 52 | 49.73 | | 1.35 | | 48.8 | | 4.04 | | 1.12 | | 57.9 | 4 | 0.4 | 40000 | 6205 | 6304 | – |
| 0550 | 55 | 52.60 | | 1.35 | | 51.7 | | 4.04 | | 1.12 | | 60.7 | 4 | 0.4 | 42100 | – | – | – |
| 0560 | 56 | 53.60 | | 1.35 | | 52.4 | | 4.04 | | 1.12 | | 61.7 | 4 | 0.4 | 42900 | – | – | – |
| 0580 | 58 | 55.60 | | 1.35 | | 54.4 | | 4.04 | | 1.12 | | 63.7 | 4 | 0.4 | 44400 | – | – | – |
| 0620 | 62 | 59.61 | | 1.90 | | 58.2 | | 4.04 | | 1.70 | | 67.7 | 4 | 0.6 | 72000 | 6206 | 6305 | 6403 |
| 0650 | 65 | 62.60 | | 1.90 | | 61.2 | | 4.04 | | 1.70 | | 70.7 | 4 | 0.6 | 75500 | – | – | – |
| 0680 | 68 | 64.82 | | 1.90 | | 63.4 | +0.80 | 4.85 | | 1.70 | | 74.6 | 5 | 0.6 | 79000 | – | – | – |
| 0720 | 72 | 68.81 | | 1.90 | | 67.4 | −0.00 | 4.85 | | 1.70 | | 78.6 | 5 | 0.6 | 83600 | 6207 | 6306 | 6404 |
| 0750 | 75 | 71.83 | | 1.90 | | 70.4 | | 4.85 | | 1.70 | | 81.6 | 5 | 0.6 | 87100 | – | – | – |
| 0800 | 80 | 76.81 | | 1.90 | +0.30 | 75.4 | | 4.85 | | 1.70 | | 86.6 | 5 | 0.6 | 93000 | 6208 | 6307 | 6405 |
| 0850 | 85 | 81.81 | | 1.90 | −0.00 | 80.4 | | 4.85 | | 1.70 | | 91.6 | 5 | 0.6 | 98700 | 6209 | – | – |
| 0900 | 90 | 86.79 | | 2.70 | | 85.4 | | 4.85 | +0.00 | 2.46 | +0.00 | 96.5 | 5 | 0.7 | 151000 | 6210 | 6308 | 6406 |
| 0950 | 95 | 91.82 | | 2.70 | | 90.4 | | 4.85 | −0.15 | 2.46 | −0.10 | 101.6 | 5 | 0.7 | 160000 | – | – | – |
| 1000 | 100 | 96.80 | | 2.70 | | 95.2 | | 4.85 | | 2.46 | | 106.5 | 5 | 0.7 | 168000 | 6211 | 6309 | 6407 |
| 1100 | 110 | 106.81 | | 2.70 | | 105.2 | | 4.85 | | 2.46 | | 116.6 | 5 | 0.7 | 150000 | 6212 | 6310 | 6408 |
| 1150 | 115 | 111.81 | +0.00 | 2.70 | | 110.2 | +1.00 | 4.85 | | 2.46 | | 121.6 | 5 | 0.7 | 193000 | – | – | – |
| 1200 | 120 | 115.21 | −0.50 | 3.10 | | 113.6 | −0.00 | 7.21 | | 2.82 | | 129.7 | 7 | 0.7 | 231000 | 6213 | 6311 | 6409 |
| 1250 | 125 | 120.22 | | 3.10 | | 118.6 | | 7.21 | | 2.82 | | 134.7 | 7 | 0.7 | 241000 | 6214 | – | – |
| 1300 | 130 | 125.22 | | 3.10 | | 123.6 | | 7.21 | | 2.82 | | 139.7 | 7 | 0.7 | 250000 | 6215 | 6312 | 6410 |
| 1400 | 140 | 135.23 | | 3.10 | | 133.0 | | 7.21 | | 2.82 | | 149.7 | 7 | 0.7 | 270000 | 6216 | 6313 | 6411 |
| 1450 | 145 | 140.23 | | 3.10 | | 138.0 | | 7.21 | | 2.82 | | 154.7 | 7 | 0.7 | 279000 | – | – | – |
| 1500 | 150 | 145.24 | | 3.10 | | 142.9 | +1.60 | 7.21 | | 2.82 | | 159.7 | 7 | 0.7 | 289000 | 6217 | 6314 | 6412 |
| 1600 | 160 | 155.22 | | 3.10 | | 152.9 | −0.00 | 7.21 | | 2.82 | | 169.7 | 7 | 0.7 | 308000 | 6218 | 6315 | 6413 |
| 1700 | 170 | 163.65 | | 3.50 | | 161.3 | | 9.60 | | 3.10 | | 182.9 | 10 | 0.7 | 360000 | 6219 | 6316 | – |
| 1800 | 180 | 173.66 | | 3.50 | | 171.2 | | 9.60 | | 3.10 | | 192.9 | 10 | 0.7 | 381000 | 6220 | 6317 | 6414 |
| 1900 | 190 | 183.64 | | 3.50 | | 181.0 | | 9.60 | | 3.10 | | 202.9 | 10 | 0.7 | 402000 | 6221 | 6318 | 6415 |
| 2000 | 200 | 193.65 | | 3.50 | | 191.0 | | 9.60 | | 3.10 | | 212.9 | 10 | 0.7 | 424000 | 6222 | 6319 | 6416 |
| 2100 | 210 | 203.60 | | 3.50 | | 200.9 | | 9.60 | | 3.10 | | 222.8 | 10 | 1.2 | 445000 | – | – | 6417 |
| 2150 | 215 | 208.60 | | 3.50 | | 205.9 | +1.80 | 9.60 | | 3.10 | | 227.8 | 10 | 1.2 | 455000 | 6224 | 6320 | – |
| 2250 | 225 | 217.00 | | 4.50 | | 214.3 | −0.00 | 10.00 | | 3.50 | | 237.0 | 10 | 1.2 | 538000 | – | 6321 | 6418 |
| 2300 | 230 | 222.00 | | 4.50 | +0.40 | 219.2 | | 10.00 | | 3.50 | | 242.0 | 10 | 1.2 | 550000 | 6226 | – | – |
| 2400 | 240 | 232.00 | | 4.50 | −0.00 | 229.2 | | 10.00 | | 3.50 | | 252.0 | 10 | 1.2 | 574000 | – | 6322 | – |

Standard material - carbon spring steel. Standard finish - phosphate and oil.

All dimensions in mm

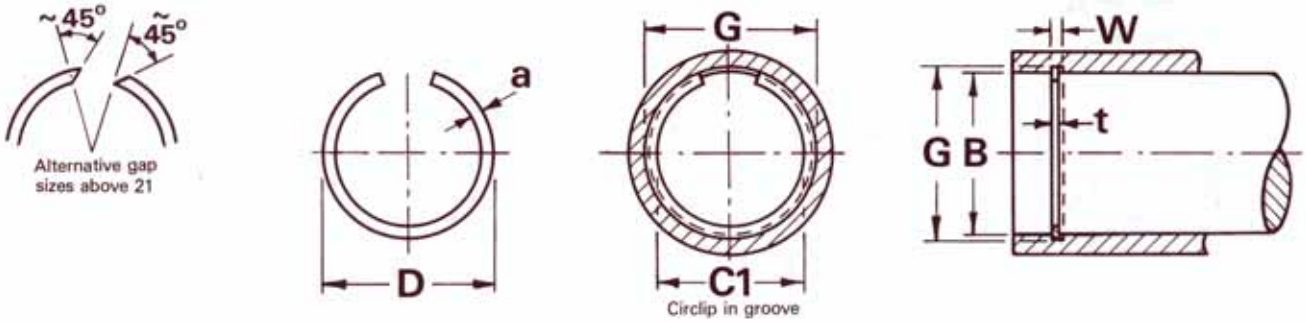


† Thrust load calculations see pages 9 & 10

| SIZE CODE | Bore (B) B | Groove (G) G | Tol. | W | Tol. | Circlip (F) D (min) | a | Tol. | t | Tol. | C1 | Tc† (N) | Tg† (N) | SIZE CODE |
|---|---|---|---|---|---|---|---|---|---|---|---|---|---|---|
| 0110 | 11 | 11.40 | | 1.1 | | 11.6 | 1.30 | | 1.0 | | 8.80 | 8380 | 830 | 0110 |
| 0120 | 12 | 12.40 | | 1.1 | | 12.7 | 1.30 | | 1.0 | | 9.80 | 9140 | 900 | 0120 |
| 0130 | 13 | 13.50 | +0.11 | 1.1 | | 13.8 | 1.30 | | 1.0 | | 10.90 | 9900 | 1220 | 0130 |
| 0140 | 14 | 14.50 | −0.00 | 1.1 | | 14.8 | 1.30 | | 1.0 | | 11.90 | 10600 | 1320 | 0140 |
| 0150 | 15 | 15.50 | | 1.1 | | 15.8 | 1.30 | | 1.0 | | 12.90 | 11400 | 1410 | 0150 |
| 0180 | 18 | 18.50 | | 1.3 | +0.075 | 18.9 | 1.75 | | 1.2 | | 15.00 | 16400 | 1700 | 0180 |
| 0190 | 19 | 19.60 | | 1.3 | −0.000 | 19.9 | 1.75 | | 1.2 | | 16.10 | 17300 | 2150 | 0190 |
| 0200 | 20 | 20.60 | | 1.3 | | 21.0 | 1.75 | | 1.2 | | 17.10 | 18300 | 2260 | 0200 |
| 0220 | 22 | 22.60 | +0.13 | 1.3 | | 23.0 | 1.75 | | 1.2 | | 19.10 | 20100 | 2490 | 0220 |
| 0240 | 24 | 24.80 | −0.00 | 1.3 | | 25.2 | 1.75 | | 1.2 | | 21.30 | 21900 | 3620 | 0240 |
| 0250 | 25 | 25.80 | | 1.3 | | 26.2 | 1.75 | | 1.2 | | 22.30 | 22800 | 3770 | 0250 |
| 0260 | 26 | 26.80 | | 1.3 | | 27.2 | 1.75 | | 1.2 | | 23.30 | 23700 | 3920 | 0260 |
| 0280 | 28 | 28.80 | | 1.3 | | 29.2 | 1.75 | | 1.2 | | 25.30 | 25600 | 4220 | 0280 |
| 0300 | 30 | 31.00 | | 1.6 | | 31.4 | 2.30 | | 1.5 | | 26.40 | 34300 | 5650 | 0300 |
| 0320 | 32 | 33.00 | | 1.6 | | 33.4 | 2.30 | | 1.5 | | 28.40 | 36600 | 6030 | 0320 |
| 0340 | 34 | 35.00 | | 1.6 | | 35.4 | 2.30 | | 1.5 | | 30.40 | 38900 | 6410 | 0340 |
| 0350 | 35 | 36.00 | | 1.6 | | 36.4 | 2.30 | | 1.5 | | 31.40 | 40000 | 6600 | 0350 |
| 0380 | 38 | 39.20 | +0.16 | 1.6 | | 39.8 | 2.30 | | 1.5 | | 34.60 | 43400 | 8600 | 0380 |
| 0400 | 40 | 41.20 | −0.00 | 1.6 | | 41.8 | 2.30 | | 1.5 | | 36.60 | 45700 | 9050 | 0400 |
| 0420 | 42 | 43.20 | | 1.6 | | 43.8 | 2.30 | | 1.5 | | 38.60 | 48000 | 9500 | 0420 |
| 0440 | 44 | 45.20 | | 1.6 | | 45.8 | 2.30 | | 1.5 | | 40.60 | 50300 | 9950 | 0440 |
| 0450 | 45 | 46.20 | | 1.6 | | 46.8 | 2.30 | | 1.5 | | 41.60 | 51400 | 10200 | 0450 |
| 0470 | 47 | 48.20 | | 1.6 | +0.10 | 48.8 | 2.30 | | 1.5 | | 43.60 | 53700 | 10600 | 0470 |
| 0480 | 48 | 49.20 | | 1.6 | −0.00 | 49.8 | 2.30 | | 1.5 | | 44.60 | 54800 | 10800 | 0480 |
| 0500 | 50 | 51.20 | | 1.6 | | 51.8 | 2.30 | | 1.5 | | 46.60 | 57100 | 11300 | 0500 |
| 0520 | 52 | 53.50 | | 1.6 | | 54.3 | 2.30 | | 1.5 | | 48.90 | 59400 | 14700 | 0520 |
| 0550 | 55 | 56.50 | | 1.6 | | 57.3 | 2.30 | | 1.5 | | 51.90 | 62800 | 15500 | 0550 |
| 0600 | 60 | 61.50 | | 1.6 | | 62.3 | 2.30 | | 1.5 | | 56.90 | 68600 | 17000 | 0600 |
| 0620 | 62 | 63.50 | +0.19 | 1.6 | | 64.3 | 2.30 | | 1.5 | | 58.90 | 70800 | 17500 | 0620 |
| 0650 | 65 | 66.50 | −0.00 | 1.6 | | 67.3 | 2.30 | | 1.5 | | 61.90 | 74300 | 18400 | 0650 |
| 0680 | 68 | 69.50 | | 1.6 | | 70.3 | 2.30 | | 1.5 | | 64.90 | 77700 | 19200 | 0680 |
| 0700 | 70 | 71.50 | | 1.6 | | 72.3 | 2.30 | | 1.5 | | 66.90 | 80000 | 19800 | 0700 |
| 0720 | 72 | 73.80 | | 2.2 | | 74.6 | 2.80 | +0.00 | 2.0 | +0.00 | 68.20 | 105200 | 24400 | 0720 |
| 0760 | 76 | 77.80 | | 2.2 | | 78.6 | 2.80 | −0.10 | 2.0 | −0.10 | 72.20 | 111000 | 25800 | 0760 |
| 0800 | 80 | 81.80 | | 2.2 | | 82.6 | 2.80 | | 2.0 | | 76.20 | 117000 | 27100 | 0800 |
| 0820 | 82 | 83.80 | | 2.2 | | 84.6 | 2.80 | | 2.0 | | 78.20 | 120000 | 27800 | 0820 |
| 0850 | 85 | 86.80 | | 2.2 | | 87.6 | 2.80 | | 2.0 | | 81.20 | 124000 | 28800 | 0850 |
| 0880 | 88 | 90.00 | | 2.7 | | 91.0 | 3.40 | | 2.5 | | 83.20 | 143000 | 33200 | 0880 |
| 0900 | 90 | 92.00 | | 2.7 | | 93.0 | 3.40 | | 2.5 | | 85.20 | 147000 | 33900 | 0900 |
| 0920 | 92 | 94.00 | | 2.7 | | 95.0 | 3.40 | | 2.5 | | 87.20 | 150000 | 34700 | 0920 |
| 0950 | 95 | 97.00 | | 2.7 | | 98.0 | 3.40 | | 2.5 | | 90.20 | 155000 | 35800 | 0950 |
| 0970 | 97 | 99.00 | +0.22 | 2.7 | | 100.0 | 3.40 | | 2.5 | | 92.20 | 158000 | 36600 | 0970 |
| 0980 | 98 | 100.00 | −0.00 | 2.7 | | 101.0 | 3.40 | | 2.5 | | 93.20 | 160000 | 36900 | 0980 |
| 1000 | 100 | 102.00 | | 2.7 | | 103.0 | 3.40 | | 2.5 | | 95.20 | 163000 | 37700 | 1000 |
| 1050 | 105 | 107.30 | | 2.7 | | 108.3 | 3.40 | | 2.5 | | 100.50 | 171000 | 45500 | 1050 |
| 1070 | 107 | 109.30 | | 2.7 | | 110.3 | 3.40 | | 2.5 | | 102.50 | 174000 | 46400 | 1070 |
| 1100 | 110 | 112.30 | | 2.7 | | 113.3 | 3.40 | | 2.5 | | 105.50 | 179000 | 47700 | 1100 |
| 1120 | 112 | 114.30 | | 2.7 | | 115.3 | 3.40 | | 2.5 | | 107.50 | 183000 | 48600 | 1120 |
| 1150 | 115 | 117.30 | | 2.7 | +0.13 | 118.3 | 3.40 | | 2.5 | | 110.50 | 187000 | 49900 | 1150 |
| 1200 | 120 | 122.30 | | 2.7 | −0.00 | 123.3 | 3.40 | | 2.5 | | 115.50 | 196000 | 52000 | 1200 |
| 1250 | 125 | 127.30 | | 2.7 | | 128.3 | 3.40 | | 2.5 | | 120.50 | 204000 | 54200 | 1250 |
| 1270 | 127 | 129.30 | | 2.7 | | 130.3 | 3.40 | | 2.5 | | 122.50 | 207000 | 55100 | 1270 |
| 1300 | 130 | 132.30 | | 2.7 | | 133.3 | 3.40 | | 2.5 | | 125.50 | 212000 | 56400 | 1300 |
| 1350 | 135 | 137.30 | | 2.7 | | 138.3 | 3.40 | | 2.5 | | 130.50 | 220000 | 58500 | 1350 |
| 1400 | 140 | 142.60 | | 2.7 | | 143.6 | 4.00 | | 2.5 | | 134.60 | 228000 | 68600 | 1400 |
| 1430 | 143 | 145.60 | +0.25 | 2.7 | | 146.6 | 4.00 | | 2.5 | | 137.60 | 233000 | 70100 | 1430 |
| 1500 | 150 | 152.60 | −0.00 | 2.7 | | 153.6 | 4.00 | | 2.5 | | 144.60 | 244000 | 73500 | 1500 |
| 1530 | 153 | 155.60 | | 2.7 | | 156.6 | 4.00 | | 2.5 | | 147.60 | 249000 | 75000 | 1530 |
| 1600 | 160 | 162.60 | | 2.7 | | 163.6 | 4.00 | | 2.5 | | 154.60 | 261000 | 78400 | 1600 |
| 1650 | 165 | 167.60 | | 2.7 | | 168.6 | 4.00 | | 2.5 | | 159.60 | 269000 | 80900 | 1650 |
| 1700 | 170 | 172.60 | | 2.7 | | 173.6 | 4.00 | | 2.5 | | 164.60 | 277000 | 83300 | 1700 |
| 1750 | 175 | 177.60 | | 2.7 | | 178.6 | 4.00 | | 2.5 | | 169.60 | 285000 | 85800 | 1750 |
| 1800 | 180 | 182.60 | | 2.7 | | 183.6 | 4.00 | | 2.5 | | 174.60 | 293000 | 88200 | 1800 |
| 1900 | 190 | 193.00 | +0.29 | 3.2 | | 194.5 | 5.00 | | 3.0 | | 183.00 | 372000 | 107000 | 1900 |
| 1950 | 195 | 198.00 | −0.00 | 3.2 | | 199.5 | 5.00 | | 3.0 | | 188.00 | 381000 | 110000 | 1950 |
| 2000 | 200 | 203.00 | | 3.2 | | 204.5 | 5.00 | | 3.0 | | 193.00 | 391000 | 113000 | 2000 |

Standard material - carbon spring steel. Standard finish - phosphate and oil.

Other sizes available on request

All dimensions in mm

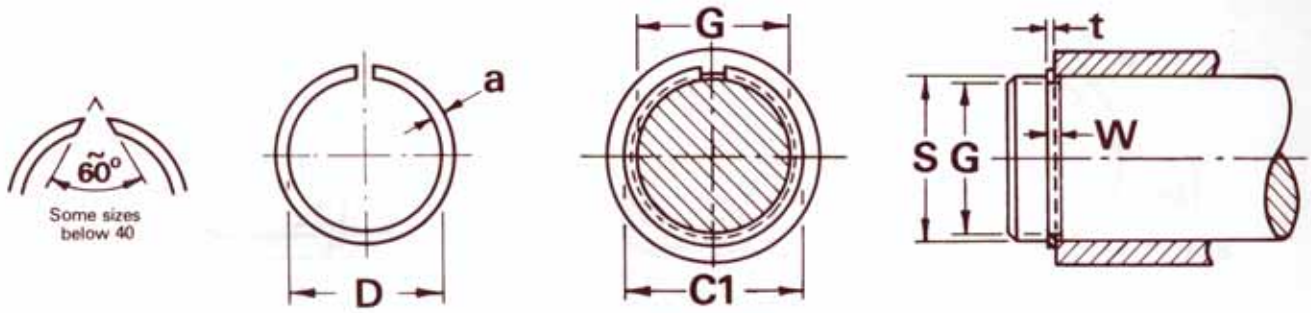


† Thrust load calculations see pages 9 & 10

| SIZE CODE | Shaft (S) S | Groove (G) G | Tol. | W | Tol. | Circlip (F) D (max) | a | Tol. | t | Tol. | C1 | Tc † (N) | Tg † (N) | SIZE CODE |
|---|---|---|---|---|---|---|---|---|---|---|---|---|---|---|
| 0100 | 10 | 9.60 | +0.00 −0.09 | 1.1 | | 9.4 | 1.30 | | 1.0 | | 12.20 | 6860 | 754 | 0100 |
| 0110 | 11 | 10.50 | | 1.1 | | 10.2 | 1.30 | | 1.0 | | 13.10 | 7540 | 1040 | 0110 |
| 0120 | 12 | 11.50 | +0.00 −0.11 | 1.1 | | 11.2 | 1.30 | | 1.0 | | 14.10 | 8230 | 1130 | 0120 |
| 0150 | 15 | 14.40 | | 1.3 | | 14.0 | 1.75 | | 1.2 | | 17.90 | 12600 | 1700 | 0150 |
| 0170 | 17 | 16.40 | | 1.3 | +0.075 −0.000 | 16.0 | 1.75 | | 1.2 | | 19.90 | 14200 | 1920 | 0170 |
| 0180 | 18 | 17.40 | | 1.3 | | 17.0 | 1.75 | | 1.2 | | 20.90 | 15100 | 2030 | 0180 |
| 0190 | 19 | 18.40 | | 1.3 | | 17.9 | 1.75 | | 1.2 | | 21.90 | 15900 | 2150 | 0190 |
| 0200 | 20 | 19.20 | | 1.3 | | 18.7 | 1.75 | | 1.2 | | 22.70 | 16800 | 3020 | 0200 |
| 0210 | 21 | 20.20 | | 1.3 | | 19.7 | 1.75 | | 1.2 | | 23.70 | 17600 | 3170 | 0210 |
| 0250 | 25 | 24.00 | +0.00 −0.13 | 1.3 | | 23.5 | 1.75 | | 1.2 | | 27.50 | 21000 | 4710 | 0250 |
| 0260 | 26 | 25.00 | | 1.3 | | 24.5 | 1.75 | | 1.2 | | 28.50 | 21800 | 4900 | 0260 |
| 0270 | 27 | 26.00 | | 1.6 | | 25.5 | 2.30 | | 1.5 | | 30.60 | 28800 | 5090 | 0270 |
| 0280 | 28 | 27.00 | | 1.6 | | 26.5 | 2.30 | | 1.5 | | 31.60 | 29900 | 5280 | 0280 |
| 0300 | 30 | 29.00 | | 1.6 | | 28.5 | 2.30 | | 1.5 | | 33.60 | 32000 | 5650 | 0300 |
| 0320 | 32 | 30.80 | | 1.6 | | 30.2 | 2.30 | | 1.5 | | 35.40 | 34100 | 7240 | 0320 |
| 0350 | 35 | 33.80 | +0.00 −0.16 | 1.6 | | 33.2 | 2.30 | | 1.5 | | 38.40 | 37300 | 7920 | 0350 |
| 0400 | 40 | 38.50 | | 1.6 | +0.10 −0.00 | 37.8 | 2.30 | | 1.5 | | 43.10 | 42600 | 11300 | 0400 |
| 0450 | 45 | 43.50 | | 1.6 | | 42.8 | 2.30 | | 1.5 | | 48.10 | 48000 | 12700 | 0450 |
| 0480 | 48 | 46.50 | | 1.6 | | 45.8 | 2.30 | | 1.5 | | 51.10 | 51200 | 13600 | 0480 |
| 0500 | 50 | 48.50 | | 1.6 | | 47.8 | 2.30 | | 1.5 | | 53.10 | 53300 | 14100 | 0500 |
| 0550 | 55 | 53.50 | | 1.6 | | 52.6 | 2.30 | | 1.5 | | 58.10 | 58700 | 15500 | 0550 |
| 0600 | 60 | 58.50 | | 1.6 | | 57.6 | 2.30 | | 1.5 | | 63.10 | 64000 | 17000 | 0600 |
| 0650 | 65 | 63.50 | +0.00 −0.19 | 1.6 | | 62.6 | 2.30 | | 1.5 | | 68.10 | 69300 | 18400 | 0650 |
| 0700 | 70 | 68.20 | | 2.2 | | 67.4 | 2.80 | | 2.0 | | 73.80 | 97100 | 23800 | 0700 |
| 0750 | 75 | 73.20 | | 2.2 | +0.13 −0.00 | 72.4 | 2.80 | +0.00 −0.10 | 2.0 | +0.00 −0.10 | 78.80 | 104000 | 25400 | 0750 |
| 0800 | 80 | 78.20 | | 2.2 | | 77.4 | 2.80 | | 2.0 | | 83.80 | 111000 | 27100 | 0800 |
| 0850 | 85 | 83.00 | | 2.7 | | 82.0 | 3.40 | | 2.5 | | 89.80 | 133000 | 32000 | 0850 |
| 0900 | 90 | 88.00 | | 2.7 | | 87.0 | 3.40 | | 2.5 | | 94.80 | 141000 | 33900 | 0900 |
| 0950 | 95 | 93.00 | | 2.7 | | 92.0 | 3.40 | | 2.5 | | 99.80 | 149000 | 35800 | 0950 |
| 1000 | 100 | 98.00 | +0.00 −0.22 | 2.7 | | 97.0 | 3.40 | | 2.5 | | 104.80 | 156000 | 37700 | 1000 |
| 1050 | 105 | 102.70 | | 2.7 | | 101.7 | 3.40 | | 2.5 | | 109.50 | 164000 | 45500 | 1050 |
| 1100 | 110 | 107.70 | | 2.7 | | 106.7 | 3.40 | | 2.5 | | 114.50 | 172000 | 47700 | 1100 |
| 1150 | 115 | 112.70 | | 2.7 | | 111.7 | 3.40 | | 2.5 | | 119.50 | 180000 | 49900 | 1150 |
| 1200 | 120 | 117.70 | | 2.7 | | 116.7 | 3.40 | | 2.5 | | 124.50 | 188000 | 52000 | 1200 |
| 1250 | 125 | 122.70 | | 2.7 | | 121.7 | 3.40 | | 2.5 | | 129.50 | 196000 | 54200 | 1250 |
| 1300 | 130 | 127.70 | | 2.7 | +0.15 −0.00 | 126.7 | 3.40 | | 2.5 | | 134.50 | 203000 | 56400 | 1300 |
| 1350 | 135 | 132.40 | | 2.7 | | 131.6 | 4.00 | | 2.5 | | 140.40 | 211000 | 66200 | 1350 |
| 1400 | 140 | 137.40 | | 2.7 | | 136.6 | 4.00 | | 2.5 | | 145.40 | 219000 | 68600 | 1400 |
| 1450 | 145 | 142.40 | | 2.7 | | 141.6 | 4.00 | | 2.5 | | 150.40 | 227000 | 71100 | 1450 |
| 1500 | 150 | 147.40 | +0.00 −0.25 | 2.7 | | 146.6 | 4.00 | | 2.5 | | 155.40 | 235000 | 73500 | 1500 |
| 1550 | 155 | 152.40 | | 2.7 | | 151.6 | 4.00 | | 2.5 | | 160.40 | 242000 | 76000 | 1550 |
| 1600 | 160 | 157.40 | | 2.7 | | 156.6 | 4.00 | | 2.5 | | 165.40 | 250000 | 78400 | 1600 |
| 1650 | 165 | 162.40 | | 2.7 | | 161.6 | 4.00 | | 2.5 | | 170.40 | 258000 | 80900 | 1650 |
| 1700 | 170 | 167.40 | | 2.7 | | 166.6 | 4.00 | | 2.5 | | 175.40 | 266000 | 83300 | 1700 |
| 1750 | 175 | 172.40 | | 2.7 | | 171.6 | 4.00 | | 2.5 | | 180.40 | 274000 | 85000 | 1750 |
| 1800 | 180 | 177.00 | | 3.2 | | 175.6 | 5.00 | | 3.0 | | 187.00 | 340000 | 101000 | 1800 |
| 1850 | 185 | 182.00 | | 3.2 | | 180.6 | 5.00 | | 3.0 | | 192.00 | 350000 | 105000 | 1850 |
| 1900 | 190 | 187.00 | +0.00 −0.29 | 3.2 | | 185.6 | 5.00 | | 3.0 | | 197.00 | 359000 | 107000 | 1900 |
| 1950 | 195 | 192.00 | | 3.2 | | 190.6 | 5.00 | | 3.0 | | 202.00 | 369000 | 110000 | 1950 |
| 2000 | 200 | 197.00 | | 3.2 | | 195.6 | 5.00 | | 3.0 | | 207.00 | 378000 | 113000 | 2000 |

Standard material - carbon spring steel. Standard finish - phosphate and oil.

Other sizes available on request

# PLAIN WIRE RINGS
# A0500

All dimensions in inches  Sizes marked • are only produced to order, details on enquiry.

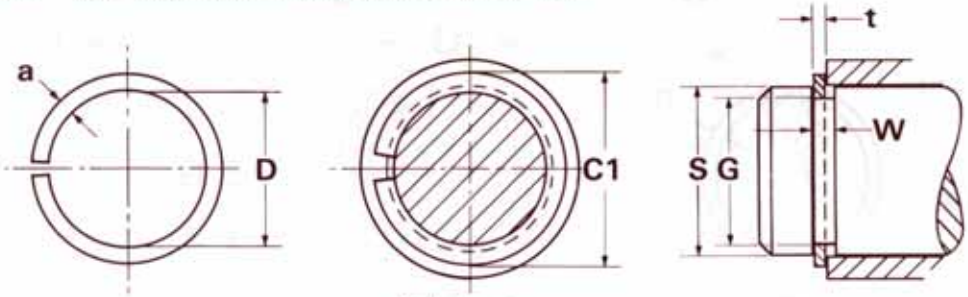


Circlip in groove

† Thrust load calculations see pages 9 & 10

| SIZE CODE | Shaft (S) S (frac) | Shaft (S) S (dec) | Groove (G) G (min) | Groove (G) W (min) | Circlip (F) D (max) | Circlip (F) a x t | Circlip (F) Tol. | Circlip (F) C1 | Tc † (lb.f) | Tg † (lb.f) | SIZE CODE |
|---|---|---|---|---|---|---|---|---|---|---|---|
| 0025 | 1/4 | .250 | .232 | .028 | .230 | .035 x .025 | | .312 | 610 | 130 | 0025 |
| 0028 | 9/32 | .281 | .263 | .028 | .261 | .035 x .025 | | .343 | 680 | 145 | 0028 |
| 0031 | 5/16 | .312 | .292 | .028 | .290 | .040 x .025 | | .382 | 760 | 175 | 0031 |
| 0034 | 11/32 | .344 | .324 | .028 | .322 | .040 x .025 | | .414 | 840 | 195 | 0034 |
| 0037 | 3/8 | .375 | .353 | .028 | .351 | .040 x .025 | | .443 | 910 | 230 | 0037 |
| • 0040 | 13/32 | .406 | .384 | .028 | .382 | .045 x .025 | | .484 | 990 | 250 | 0040 |
| 0043 | 7/16 | .438 | .414 | .028 | .412 | .045 x .025 | | .514 | 1070 | 300 | 0043 |
| 0050 | 1/2 | .500 | .476 | .039 | .474 | .048 x .035 | | .582 | 1750 | 340 | 0050 |
| 0056 | 9/16 | .562 | .536 | .039 | .534 | .048 x .035 | ± .002 | .642 | 1960 | 410 | 0056 |
| • 0059 | 19/32 | .594 | .567 | .039 | .565 | .060 x .035 | | .701 | 2080 | 450 | 0059 |
| 0062 | 5/8 | .625 | .598 | .039 | .596 | .060 x .035 | | .732 | 2180 | 475 | 0062 |
| • 0068 | 11/16 | .688 | .658 | .046 | .656 | .070 x .042 | | .812 | 2920 | 585 | 0068 |
| • 0075 | 3/4 | .750 | .717 | .046 | .715 | .070 x .042 | | .871 | 3180 | 700 | 0075 |
| • 0081 | 13/16 | .812 | .778 | .046 | .776 | .070 x .042 | | .932 | 3440 | 780 | 0081 |
| 0087 | 7/8 | .875 | .835 | .046 | .833 | .070 x .042 | | .989 | 3710 | 990 | 0087 |
| 0093 | 15/16 | .938 | .898 | .046 | .896 | .081 x .042 | | 1.074 | 3980 | 1060 | 0093 |
| 0100 | 1. | 1.000 | .957 | .046 | .955 | .081 x .042 | | 1.133 | 4240 | 1215 | 0100 |

Standard material - carbon spring steel. Standard finish - self finish and oil

# PLAIN WIRE RINGS
# A0600

All dimensions in inches  Sizes marked • are only produced to order, details on enquiry.

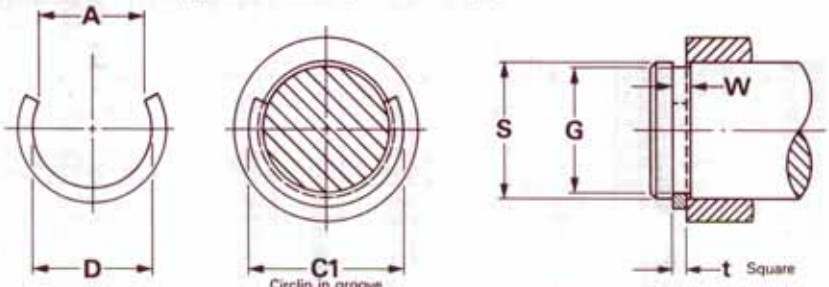


Circlip in groove

† Thrust load calculations see pages 9 & 10

| SIZE CODE | Shaft (S) S (frac) | Shaft (S) S (dec) | Groove (G) G (min) | Groove (G) W (min) | Circlip (F) D (max) | Circlip (F) t | Circlip (F) Tol. | Circlip (F) C1 | Circlip (F) A (max) | Tc † (lb.f) | Tg † (lb.f) | SIZE CODE |
|---|---|---|---|---|---|---|---|---|---|---|---|---|
| • 0012 | 1/8 | .125 | .115 | .024 | .114 | .020 | | .165 | .101 | 180 | 27 | 0012 |
| 0015 | 5/32 | .156 | .146 | .024 | .145 | .020 | | .196 | .128 | 220 | 33 | 0015 |
| • 0018 | 3/16 | .187 | .178 | .024 | .175 | .020 | | .228 | .154 | 270 | 36 | 0018 |
| 0025 | 1/4 | .250 | .238 | .029 | .236 | .025 | | .298 | .208 | 460 | 64 | 0025 |
| 0031 | 5/16 | .312 | .296 | .036 | .293 | .032 | | .370 | .258 | 740 | 105 | 0031 |
| 0037 | 3/8 | .375 | .357 | .041 | .353 | .036 | | .439 | .311 | 1015 | 145 | 0037 |
| • 0043 | 7/16 | .438 | .418 | .045 | .413 | .040 | | .508 | .346 | 1320 | 185 | 0043 |
| 0050 | 1/2 | .500 | .476 | .052 | .471 | .046 | | .578 | .414 | 1750 | 255 | 0050 |
| • 0056 | 9/16 | .563 | .530 | .069 | .525 | .062 | ± .002 | .668 | .463 | 2685 | 395 | 0056 |
| 0062 | 5/8 | .625 | .597 | .062 | .591 | .056 | | .723 | .521 | 2685 | 370 | 0062 |
| • 0068 | 11/16 | .687 | .660 | .062 | .653 | .056 | | .786 | .576 | 2950 | 395 | 0068 |
| 0075 | 3/4 | .750 | .718 | .069 | .712 | .062 | | .856 | .628 | 3580 | 510 | 0075 |
| 0081 | 13/16 | .812 | .780 | .069 | .773 | .062 | | .918 | .682 | 3870 | 550 | 0081 |
| • 0093 | 15/16 | .937 | .912 | .078 | .893 | .072 | | 1.070 | .787 | 5210 | 495 | 0093 |
| • 0100 | 1 | 1.000 | .960 | .085 | .950 | .078 | | 1.130 | .838 | 6040 | 850 | 0100 |
| • 0112 | 1.1/8 | 1.125 | 1.079 | .100 | 1.068 | .093 | ± .003 | 1.279 | .940 | 7260 | 1100 | 0112 |

Standard material - carbon spring steel. Standard finish - self finish and oil

# PLAIN WIRE RINGS
# A0700 ('A' Sizes) & A0700

All dimensions in inches  Sizes marked • are only produced to order, details on enquiry.

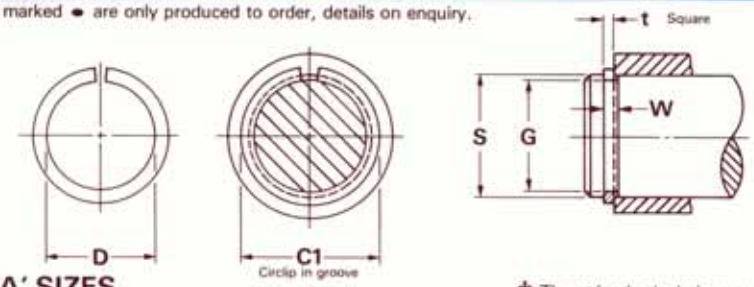


## A0700 'A' SIZES

† Thrust load calculations see pages 9 & 10

| SIZE CODE | Shaft (S) S (frac) | Shaft (S) S (dec) | Groove (G) G (min) | Groove (G) W (min) | Circlip (F) D (max) | Circlip (F) t | Circlip (F) Tol. | Circlip (F) C1 | Tc† (lb.f) | Tg† (lb.f) | SIZE CODE |
|---|---|---|---|---|---|---|---|---|---|---|---|
| A018 | 3/16 | .187 | .176 | .029 | .173 | .025 | ± .002 | .236 | 456 | 58 | A018 |
| A025 | 1/4 | .250 | .234 | .036 | .232 | .032 | | .308 | 795 | 113 | A025 |
| A037 | 3/8 | .375 | .351 | .052 | .347 | .046 | | .453 | 1750 | 255 | A037 |
| A043 | 7/16 | .438 | .420 | .062 | .405 | .056 | | .542 | 2510 | 225 | A043 |
| A050 | 1/2 | .500 | .468 | .069 | .463 | .062 | | .602 | 3180 | 450 | A050 |
| A056 | 9/16 | .563 | .526 | .078 | .521 | .072 | | .684 | 4180 | 590 | A056 |
| A062 | 5/8 | .625 | .585 | .085 | .579 | .080 | ± .003 | .761 | 5100 | 710 | A062 |
| A068 | 11/16 | .687 | .648 | .085 | .641 | .080 | | .824 | 5610 | 760 | A068 |
| A075 | 3/4 | .750 | .704 | .100 | .697 | .092 | | .904 | 6290 | 975 | A075 |
| A100 | 1 | 1.000 | .938 | .133 | .929 | .125 | | 1.204 | 11500 | 1750 | A100 |
| A106 | 1 .1/16 | 1.062 | 1.001 | .133 | .990 | .125 | | 1.267 | 12200 | 1830 | A106 |

Standard material - carbon spring steel. Standard finish - self finish & oil.

## A0700

| | SIZE CODE | Shaft (S) S (frac) | Shaft (S) S (dec) | Groove (G) G (min) | Groove (G) W (min) | Circlip (F) D (max) | Circlip (F) t | Circlip (F) Tol. | Circlip (F) C1 | Tc† (lb.f) | Tg† (lb.f) | SIZE CODE |
|---|---|---|---|---|---|---|---|---|---|---|---|---|
| | 0012 | 1/8 | .125 | .115 | .024 | .114 | .020 | ± .002 | .165 | 238 | 35 | 0012 |
| | 0015 | 5/32 | .156 | .146 | .024 | .145 | .020 | | .196 | 300 | 44 | 0015 |
| | 0018 | 3/16 | .187 | .178 | .024 | .175 | .020 | | .228 | 357 | 48 | 0018 |
| | 0021 | 7/32 | .219 | .207 | .029 | .203 | .025 | | .267 | 530 | 75 | 0021 |
| | 0025 | 1/4 | .250 | .238 | .029 | .236 | .025 | | .298 | 610 | 85 | 0025 |
| • | 0028 | 9/32 | .281 | .265 | .036 | .261 | .032 | | .339 | 894 | 127 | 0028 |
| | 0031 | 5/16 | .312 | .296 | .036 | .293 | .032 | | .370 | 992 | 140 | 0031 |
| | 0037 | 3/8 | .375 | .357 | .041 | .353 | .036 | | .439 | 1350 | 190 | 0037 |
| | 0043 | 7/16 | .438 | .418 | .045 | .413 | .040 | | .508 | 1765 | 250 | 0043 |
| | 0050 | 1/2 | .500 | .476 | .052 | .471 | .046 | | .578 | 2333 | 340 | 0050 |
| | 0056 | 9/16 | .563 | .530 | .069 | .525 | .062 | | .668 | 3580 | 525 | 0056 |
| | 0062 | 5/8 | .625 | .597 | .062 | .591 | .056 | | .723 | 3580 | 495 | 0062 |
| • | 0068 | 11/16 | .687 | .660 | .062 | .653 | .056 | | .786 | 3930 | 525 | 0068 |
| • | 0075 | 3/4 | .750 | .718 | .069 | .712 | .062 | | .856 | 4770 | 680 | 0075 |
| • | 0081 | 13/16 | .812 | .780 | .069 | .773 | .062 | | .918 | 5165 | 735 | 0081 |
| | 0087 | 7/8 | .875 | .839 | .078 | .831 | .072 | ± .003 | .997 | 6500 | 890 | 0087 |
| | 0100 | 1 | 1.000 | .960 | .085 | .950 | .078 | | 1.132 | 7950 | 1130 | 0100 |
| • | 0106 | 1.11/16 | 1.062 | 1.023 | .085 | 1.012 | .078 | | 1.195 | 8450 | 1170 | 0106 |
| | 0112 | 1.1/8 | 1.125 | 1.079 | .100 | 1.068 | .093 | | 1.281 | 9540 | 1460 | 0112 |

Standard material - carbon spring steel. Standard finish - self finish & oil.

# PLAIN WIRE RINGS
# M2500

All dimensions in mm

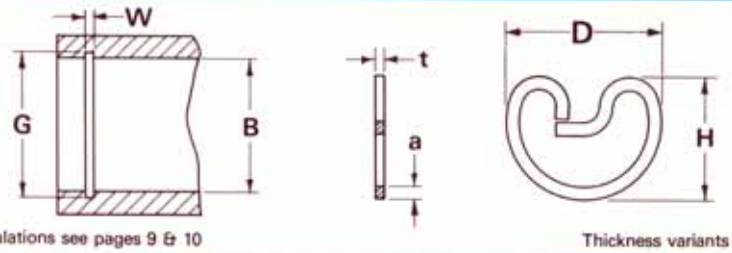


† Thrust load calculations see pages 9 & 10

Thickness variants available on request.

| SIZE CODE | Bore B | Groove (G) G | Groove (G) Tol. | Groove (G) W | Groove (G) Tol. | Circlip (F) t | Circlip (F) Tol. | Circlip (F) a | Circlip (F) Tol. | Circlip (F) D | Circlip (F) H | Tc† (N) | Tg† (N) | SIZE CODE |
|---|---|---|---|---|---|---|---|---|---|---|---|---|---|---|
| 0240 | 24 | 25.2 | +0.08 −0.00 | 1.6 | +0.140 −0.000 | 1.5 | +0.000 −0.030 | 2.0 | +0.060 −0.100 | 26.3 | 21.5 | 29000 | 7000 | 0240 |
| 0270 | 27 | 28.2 | | 1.6 | | 1.5 | | 2.4 | | 30.1 | 24.4 | 33000 | 8000 | 0270 |
| 0300 | 30 | 31.2 | | 1.6 | | 1.5 | | 2.4 | | 32.7 | 27.0 | 37000 | 8800 | 0300 |

Standard material - carbon spring steel. Standard finish - self finish and oil

All dimensions in inches  Sizes marked • are only produced to order, details on enquiry.

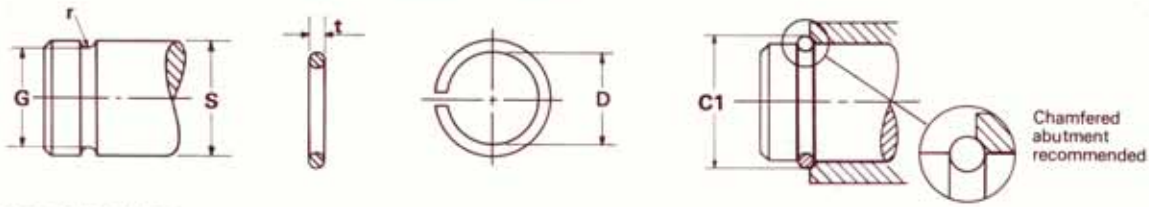


## A0900 'A' SIZES

† Thrust load calculations see pages 9 & 10

| SIZE CODE | Shaft (S) S (frac) | Shaft (S) S (dec) | Groove (G) G | Groove (G) Tol | Groove (G) r | Groove (G) Tol | Circlip (F) D (max) | Circlip (F) t | Circlip (F) Tol. | Circlip (F) C1 | Tc† (lb.f) | Tg† (lb.f) | SIZE CODE |
|---|---|---|---|---|---|---|---|---|---|---|---|---|---|
| A025 | 1/4 | .250 | .232 | +.003 −.000 | .0187 | +.001 −.000 | .230 | .036 | ±.002 | .317 | 300 | 106 | A025 |
| A037 | 3/8 | .375 | .349 | | .024 | | .345 | .043 | | .448 | 545 | 244 | A037 |
| A050 | 1/2 | .500 | .464 | +.004 −.000 | .031 | +.002 −.000 | .458 | .059 | | .596 | 1010 | 450 | A050 |
| A062 | 5/8 | .625 | .581 | | .039 | | .575 | .072 | | .743 | 1550 | 710 | A062 |
| A068 | 11/16 | .688 | .644 | | .039 | | .637 | .072 | | .806 | 1700 | 780 | A068 |
| A075 | 3/4 | .750 | .698 | | .044 | +.003 −.000 | .690 | .085 | ±.003 | .888 | 1930 | 1020 | A075 |
| A100 | 1 | 1.000 | .926 | | .0605 | | .917 | .118 | | 1.182 | 3610 | 1980 | A100 |

Standard material - carbon spring steel. Standard finish - self finish & oil.

## A0900

*Supplied in ZD finish only.

| SIZE CODE | Shaft (S) S (frac) | Shaft (S) S (dec) | Groove (G) G | Groove (G) Tol | Groove (G) r | Groove (G) Tol | Circlip (F) D (max) | Circlip (F) t | Circlip (F) Tol. | Circlip (F) C1 | Tc† (lb.f) | Tg† (lb.f) | SIZE CODE |
|---|---|---|---|---|---|---|---|---|---|---|---|---|---|
| 0012 | 1/8 | .125 | .111 | +.003 −.000 | .013 | +.001 −.000 | .110 | .022 | ±.002 | .165 | 88 | 39 | 0012 |
| 0015 | 5/32 | .156 | .142 | | .013 | | .140 | .022 | | .196 | 110 | 48 | 0015 |
| 0018 | 3/16 | .187 | .174 | | .013 | | .172 | .022 | | .228 | 132 | 53 | 0018 |
| 0021 | 7/32 | .219 | .205 | | .013 | | .202 | .022 | | .259 | 155 | 68 | 0021 |
| 0025 | 1/4 | .250 | .232 | | .016 | | .230 | .028 | | .298 | 230 | 106 | 0025 |
| 0037 | 3/8 | .375 | .357 | | .016 | | .353 | .028 | | .426 | 345 | 159 | 0037 |
| 0043 | 7/16 | .438 | .416 | | .020 | | .412 | .035 | | .496 | 510 | 235 | 0043 |
| 0050 | 1/2 | .500 | .474 | +.004 −.000 | .024 | +.002 −.000 | .468 | .043 | | .570 | 725 | 325 | 0050 |
| • 0056 | 9/16 | .562 | .534 | | .026 | | .529 | .045 | | .634 | 855 | 400 | 0056 |
| 0062 | 5/8 | .625 | .593 | | .028 | | .587 | .051 | | .709 | 1080 | 495 | 0062 |
| 0068 | 11/16 | .688 | .656 | | .028 | | .649 | .051 | | .772 | 1190 | 565 | 0068 |
| 0075 | 3/4 | .750 | .714 | | .031 | | .706 | .059 | | .850 | 1510 | 680 | 0075 |
| 0087 | 7/8 | .875 | .831 | | .039 | | .823 | .072 | | .993 | 2160 | 990 | 0087 |
| 0093 | 15/16 | .938 | .894 | | .039 | | .885 | .072 | | 1.052 | 2320 | 1080 | 0093 |
| •0106 | 1. 1/16 | 1.062 | 1.011 | +.005 −.000 | .044 | +.003 −.000 | 1.000 | .085 | ±.003 | 1.202 | 2740 | 1380 | 0106 |
| 0118 | 1. 3/16 | 1.188 | 1.126 | | .052 | | 1.114 | .100 | | 1.347 | 3620 | 1915 | 0118 |
| 0137 | 1. 3/8 | 1.375 | 1.295 | | .069 | | 1.281 | .130 | | 1.571 | 5500 | 2990 | 0137 |

Standard material - carbon spring steel. Standard finish - self finish & oil.

## A1000

| SIZE CODE | Shaft (S) S (frac) | Shaft (S) S (dec) | Groove (G) G | Groove (G) Tol | Groove (G) r | Groove (G) Tol | Circlip (F) D (max) | Circlip (F) t | Circlip (F) Tol. | Circlip (F) C1 | Tc† (lb.f) | Tg† (lb.f) | SIZE CODE |
|---|---|---|---|---|---|---|---|---|---|---|---|---|---|
| 0012 | 1/8 | .125 | .113 | +.003 −.000 | .0065 | +.001 −.000 | .110 | .012 | ±.002 | .147 | 44 | 32 | 0012 |
| • 0025 | 1/4 | .250 | .228 | | .0115 | | .221 | .022 | | .285 | 177 | 134 | 0025 |
| • 0031 | 5/16 | .312 | .290 | | .0115 | | .281 | .022 | | .347 | 220 | 168 | 0031 |
| • 0034 | 11/32 | .344 | .322 | | .0115 | | .312 | .022 | | .379 | 243 | 185 | 0034 |
| 0037 | 3/8 | .375 | .339 | | .0187 | | .329 | .036 | | .424 | 450 | 350 | 0037 |
| 0040 | 13/32 | .406 | .370 | | .0187 | | .359 | .036 | | .455 | 490 | 380 | 0040 |
| 0043 | 7/16 | .438 | .402 | | .0187 | | .390 | .036 | | .487 | 525 | 410 | 0043 |
| 0046 | 15/32 | .469 | .433 | | .0187 | | .420 | .036 | | .518 | 565 | 440 | 0046 |
| 0050 | 1/2 | .500 | .452 | +.004 −.000 | .0250 | +.002 −.000 | .438 | .048 | | .562 | 815 | 620 | 0050 |
| 0056 | 9/16 | .562 | .514 | | .0250 | | .498 | .048 | | .624 | 915 | 700 | 0056 |
| 0062 | 5/8 | .625 | .577 | | .0250 | | .560 | .048 | | .687 | 1010 | 775 | 0062 |
| 0068 | 11/16 | .688 | .640 | | .0250 | | .621 | .048 | | .750 | 1120 | 855 | 0068 |
| 0075 | 3/4 | .750 | .686 | | .0335 | | .665 | .064 | | .832 | 1640 | 1270 | 0075 |
| • 0081 | 13/16 | .812 | .748 | | .0335 | | .726 | .064 | | .894 | 1780 | 1380 | 0081 |
| 0087 | 7/8 | .875 | .811 | | .0335 | | .786 | .064 | | .957 | 1920 | 1480 | 0087 |
| 0093 | 15/16 | .938 | .874 | | .0335 | | .848 | .064 | | 1.020 | 2050 | 1590 | 0093 |
| 0100 | 1 | 1.000 | .936 | | .0335 | | .908 | .064 | | 1.082 | 2190 | 1690 | 0100 |
| • 0106 | 1. 1/16 | 1.062 | .982 | +.005 −.000 | .0415 | +.003 −.000 | .953 | .080 | ±.003 | 1.163 | 2890 | 2250 | 0106 |
| • 0112 | 1. 1/8 | 1.125 | 1.045 | | .0415 | | 1.012 | .080 | | 1.226 | 3060 | 2380 | 0112 |
| 0125 | 1. 1/4 | 1.250 | 1.170 | | .0415 | | 1.135 | .080 | | 1.351 | 3400 | 2650 | 0125 |
| 0137 | 1. 3/8 | 1.375 | 1.295 | | .0415 | | 1.258 | .080 | | 1.476 | 3740 | 2910 | 0137 |
| 0150 | 1. 1/2 | 1.500 | 1.420 | | .0415 | | 1.380 | .080 | | 1.601 | 4080 | 3180 | 0150 |
| • 0162 | 1. 5/8 | 1.625 | 1.545 | | .0415 | | 1.500 | .080 | | 1.726 | 4420 | 3440 | 0162 |
| • 0175 | 1. 3/4 | 1.750 | 1.670 | | .0415 | | 1.621 | .080 | | 1.851 | 4760 | 3710 | 0175 |
| 0187 | 1. 7/8 | 1.875 | 1.771 | | .0545 | | 1.720 | .104 | | 2.000 | 5950 | 5250 | 0187 |
| 0200 | 2 | 2.000 | 1.896 | | .0545 | | 1.840 | .104 | | 2.125 | 6340 | 5600 | 0200 |
| 0212 | 2. 1/8 | 2.125 | 2.021 | +.007 −.000 | .0545 | | 1.960 | .104 | | 2.252 | 6740 | 5830 | 0212 |
| 0237 | 2. 3/8 | 2.375 | 2.271 | | .0545 | | 2.203 | .104 | | 2.502 | 7540 | 6510 | 0237 |
| 0250 | 2. 1/2 | 2.500 | 2.396 | | .0545 | | 2.324 | .104 | | 2.627 | 7930 | 6850 | 0250 |
| • 0262 | 2. 5/8 | 2.625 | 2.497 | | .0665 | | 2.425 | .128 | | 2.776 | 10300 | 8980 | 0262 |
| 0300 | 3 | 3.000 | 2.872 | | .0665 | | 2.785 | .128 | | 3.151 | 11800 | 10300 | 0300 |

Standard material - carbon spring steel. Standard finish - zinc coated.

All dimensions in inches

Standard material - carbon spring steel. Standard finish - self finish and oil.

FORM 1 FORM 2 FORM 3

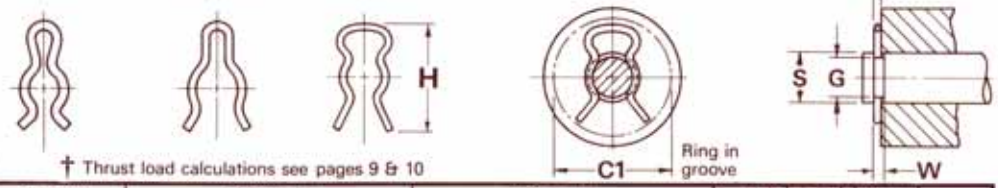


## A1100

† Thrust load calculations see pages 9 & 10

| SIZE CODE | Shaft (S) S | Shaft (S) Tol. | Groove (G) G | Groove (G) Tol. | Groove (G) W | Groove (G) Tol. | Circlip (F) H | Circlip (F) C1 | Circlip (F) t | Circlip (F) Tol. | Tc† (lb.f) | Tg† (lb.f) | Applicator | FORM |
|---|---|---|---|---|---|---|---|---|---|---|---|---|---|---|
| 0008 | .172 | | .095 | | .026 | +.003 −.000 | .410 | .430 | .022 dia. | | 55 | 62 | 32 | 1 |
| 0012 | .218 | +.000 −.030 | .135 | | .040 | | .470 | .490 | .036 dia. | | 158 | 114 | 34A | 3 |
| 0015 | .234 | | .160 | ±.010 | .040 | | .450 | .570 | .036 sq. | | 201 | 103 | 36 | 1 |
| 0018 | .250 | | .170 | | .040 | | .500 | .520 | .036 dia. | | 158 | 110 | 37 | 3 |
| 0021 | .297 | | .195 | ±.015 | .044 | +.004 −.000 | .520 | .560 | .040 dia. | ±.002 | 197 | 160 | 31 | 3 |
| 0028 | .438 | +.000 −.050 | .300 | | .060 | | .750 | .890 | .056 dia. | | 398 | 307 | 38 | 3 |
| 0037 | .531 | | .390 | | .060 | | .840 | .960 | .056 dia. | | 398 | 312 | 33 | 2 |
| 0043 | .562 | +.000 −.070 | .440 | ±0.20 | .060 | | .850 | .960 | .056 dia. | | 398 | 276 | 39 | 2 |
| 0050 | .656 | | .500 | | .068 | | 1.130 | 1.330 | .064 dia. | | 525 | 393 | 53 | 1 |

All dimensions in inches

Standard material - carbon spring steel. Standard finish - self finish and oil.

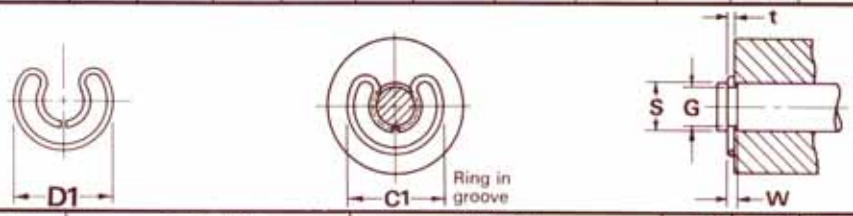


## A1200

| SIZE CODE | Shaft (S) S | Shaft (S) Tol. | Groove (G) G | Groove (G) Tol. | Groove (G) W | Groove (G) Tol. | Circlip (F) D1 | Circlip (F) C1 | Circlip (F) t | Circlip (F) Tol. | Tc† (lb.f) | Tg† (lb.f) | Applicator | SIZE CODE |
|---|---|---|---|---|---|---|---|---|---|---|---|---|---|---|
| 0007 | .125 | | .075 | +.005 −.000 | .036 | | .310 | .340 | .032 dia. | | 338 | 70 | 40 | 0007 |
| 0011 | .156 | | .115 | | .036 | | .360 | .390 | .032 sq. | | 434 | 63 | 41 | 0011 |
| 0013 | .188 | | .130 | | .040 | | .450 | .490 | .036 dia. | | 603 | 139 | 42 | 0013 |
| 0014 | .188 | | .140 | | .036 | | .400 | .440 | .032 sq. | | 532 | 84 | 43 | 0014 |
| 0015 | .219 | +.005 −.015 | .150 | | .052 | | .510 | .550 | .048 sq. | | 962 | 190 | 44 | 0015 |
| R015 | .219 | | .150 | | .052 | | .510 | .550 | .048 dia. | | 962 | 190 | 44 | R015 |
| 0017 | .219 | | .170 | | .036 | +.003 −.000 | .480 | .530 | .032 sq. | | 600 | 104 | 45 | 0017 |
| 0019 | .250 | | .195 | +.010 −.005 | .044 | | .480 | .540 | .040 sq. | | 915 | 150 | 46 | 0019 |
| 0021 | .250 | | .200 | | .036 | | .480 | .540 | .032 sq. | ±.002 | 723 | 125 | 47 | 0021 |
| R021 | .250 | | .200 | | .036 | | .480 | .540 | .032 dia. | | 700 | 125 | 47 | R021 |
| 0022 | .266 | | .210 | | .044 | | .540 | .590 | .040 sq. | | 978 | 165 | 48 | 0022 |
| 0023 | .281 | +.010 −.015 | .220 | | .052 | | .560 | .610 | .048 dia. | | 1200 | 203 | 49 | 0023 |
| 0025 | .313 | | .255 | | .044 | | .570 | .630 | .040 sq. | | 1160 | 209 | 50 | 0025 |
| 0034 | .375 | | .330 | | .044 | | .690 | .740 | .040 sq. | | 1400 | 153 | 51 | 0034 |
| 0043 | .500 | | .435 | | .060 | | .870 | .940 | .056 sq. | | 2680 | 411 | 52 | 0043 |
| • 0052 | .563 | ±.015 | .500 | +.015 −.010 | .068 | +.004 −.000 | 1.030 | 1.100 | .064 sq. | | 3480 | 383 | 53A | 0052 |
| 0057 | .625 | | .560 | | .068 | | 1.120 | 1.200 | .064 sq. | | 3880 | 452 | 54A | 0057 |

All dimensions in mm

Standard material - carbon spring steel. Standard finish - self finish and oil.

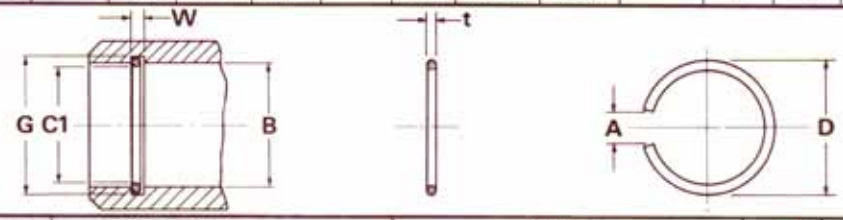


## M1700

| SIZE CODE | Bore (B) B | Groove (G) G | Groove (G) Tol. | Groove (G) W | Groove (G) Tol. | Circlip (F) D (min) | Circlip (F) t | Circlip (F) Tol. | Circlip (F) C1 | Circlip (F) A (min) | Tc† (N) | Tg† (N) | SIZE CODE |
|---|---|---|---|---|---|---|---|---|---|---|---|---|---|
| 0100 | 10 | 11.05 | | 1.0 | | 11.8 | 0.9 | | 8.9 | 7.0 | 5020 | 1580 | 0100 |
| 0120 | 12 | 13.13 | | 1.1 | | 13.9 | 1.0 | | 10.8 | 7.0 | 6730 | 2040 | 0120 |
| • 0125 | 12.5 | 13.64 | | 1.1 | | 14.4 | 1.0 | | 11.3 | 7.0 | 7010 | 2150 | 0125 |
| • 0130 | 13 | 14.15 | | 1.1 | | 14.9 | 1.0 | | 11.8 | 7.0 | 7290 | 2250 | 0130 |
| 0140 | 14 | 15.34 | | 1.3 | | 16.1 | 1.2 | | 12.6 | 7.5 | 9490 | 2830 | 0140 |
| • 0150 | 15 | 16.36 | | 1.3 | | 17.1 | 1.2 | | 13.6 | 7.5 | 10200 | 3070 | 0150 |
| 0160 | 16 | 17.35 | | 1.3 | | 18.1 | 1.2 | | 14.6 | 7.5 | 10800 | 3250 | 0160 |
| 0170 | 17 | 18.54 | | 1.5 | +0.08 −0.00 | 19.3 | 1.4 | +0.08 −0.04 | 15.3 | 8.0 | 13500 | 3940 | 0170 |
| • 0175 | 17.5 | 19.05 | | 1.5 | | 20.0 | 1.4 | | 15.8 | 9.0 | 13900 | 4090 | 0175 |
| • 0180 | 18 | 19.56 | +0.15 −0.00 | 1.5 | | 20.5 | 1.4 | | 16.3 | 9.0 | 14300 | 4230 | 0180 |
| 0190 | 19 | 20.55 | | 1.5 | | 21.5 | 1.4 | | 17.3 | 9.0 | 15100 | 4440 | 0190 |
| • 0200 | 20 | 21.54 | | 1.5 | | 22.5 | 1.4 | | 18.3 | 9.0 | 15900 | 4640 | 0200 |
| • 0210 | 21 | 22.76 | | 1.7 | | 23.7 | 1.6 | | 19.1 | 9.5 | 19100 | 5570 | 0210 |
| • 0220 | 22 | 23.75 | | 1.7 | | 24.7 | 1.6 | | 20.1 | 9.5 | 20000 | 5800 | 0220 |
| 0240 | 24 | 25.96 | | 1.9 | | 27.0 | 1.8 | | 21.9 | 10.0 | 24700 | 7090 | 0240 |
| • 0250 | 25 | 26.95 | | 1.9 | | 27.9 | 1.8 | | 22.9 | 10.0 | 25700 | 7350 | 0250 |
| • 0280 | 28 | 30.15 | | 2.1 | | 31.1 | 2.0 | | 25.7 | 11.0 | 28500 | 9080 | 0280 |
| • 0300 | 30 | 32.15 | | 2.1 | +0.10 −0.00 | 33.1 | 2.0 | +0.10 −0.05 | 27.7 | 11.0 | 30500 | 9720 | 0300 |
| • 0320 | 32 | 34.15 | | 2.1 | | 35.1 | 2.0 | | 29.7 | 11.0 | 32500 | 10400 | 0320 |
| • 0340 | 34 | 36.17 | | 2.1 | | 37.1 | 2.0 | | 31.7 | 11.0 | 34600 | 11100 | 0340 |

Sizes marked • are only produced to order, details on enquiry.

All dimensions in inches

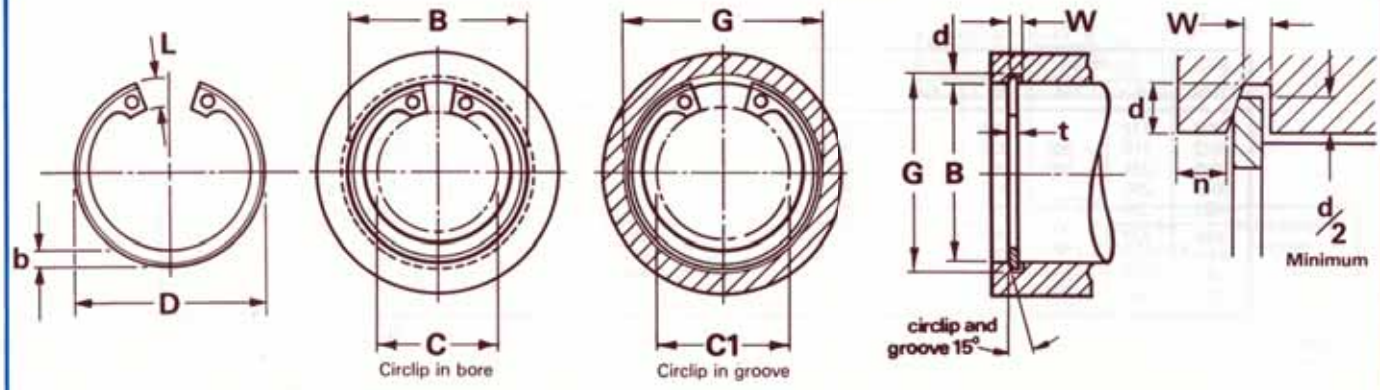


E = Maximum end play take up capability

† Thrust load calculations see pages 9 & 10

| SIZE CODE | Bore (B) B (frac.) | Bore (B) B (dec.) | Groove (G) G | Groove (G) Tol. | Groove (G) W | Groove (G) Tol. | Groove (G) n (min) | Groove (G) d ~ | Circlip (F) t | Circlip (F) Tol. | Circlip (F) D | Circlip (F) Tol. | Circlip (F) C | Circlip (F) C1 | Circlip (F) L (max) | Circlip (F) b ~ | Circlip (F) E | Tc† (lb.f) | Tg† (lb.f) |
|---|---|---|---|---|---|---|---|---|---|---|---|---|---|---|---|---|---|---|---|
| 0156 | 1.9/16 | 1.562 | 1.674 | | .052 | | .176 | .058 | .062 | | 1.734 | | 1.11 | 1.20 | .207 | .160 | .007 | 11400 | 2560 |
| 0162 | 1.5/8 | 1.625 | 1.743 | | .051 | | .185 | .061 | .062 | | 1.804 | | 1.12 | 1.22 | .232 | .160 | .008 | 11800 | 2800 |
| 0165 | — | 1.653 | 1.773 | | .051 | | .188 | .062 | .062 | | 1.835 | | 1.15 | 1.25 | .232 | .167 | .008 | 12000 | 2900 |
| 0168 | 1.11/16 | 1.688 | 1.810 | | .050 | | .191 | .063 | .062 | | 1.874 | | 1.18 | 1.28 | .232 | .170 | .008 | 12300 | 3010 |
| 0175 | 1.3/4 | 1.750 | 1.878 | +.005 −.000 | .050 | +.001 −.000 | .200 | .066 | .062 | | 1.942 | +.035 −.025 | 1.23 | 1.33 | .239 | .175 | .008 | 12700 | 3260 |
| 0181 | 1.13/16 | 1.812 | 1.944 | | .050 | | .206 | .068 | .062 | | 2.012 | | 1.29 | 1.40 | .239 | .170 | .009 | 13200 | 3480 |
| 0185 | — | 1.850 | 1.984 | | .050 | | .209 | .069 | .062 | | 2.054 | | 1.33 | 1.44 | .239 | .170 | .009 | 13500 | 3610 |
| 0187 | 1.7/8 | 1.875 | 2.011 | | .050 | | .212 | .070 | .062 | | 2.072 | | 1.36 | 1.46 | .239 | .170 | .009 | 13700 | 3710 |
| 0193 | 1.15/16 | 1.938 | 2.082 | | .049 | | .224 | .074 | .062 | | 2.141 | | 1.42 | 1.53 | .239 | .165 | .009 | 14100 | 4050 |
| 0200 | 2 | 2.000 | 2.144 | | .048 | | .224 | .074 | .062 | | 2.210 | | 1.47 | 1.58 | .245 | .170 | .009 | 14600 | 4180 |
| 0206 | 2.1/16 | 2.062 | 2.210 | | .065 | | .231 | .077 | .078 | | 2.280 | | 1.51 | 1.63 | .255 | .186 | .009 | 18900 | 4490 |
| 0212 | 2.1/8 | 2.125 | 2.279 | | .065 | | .240 | .080 | .078 | | 2.350 | | 1.56 | 1.67 | .265 | .195 | .010 | 19500 | 4800 |
| 0218 | 2.3/16 | 2.188 | 2.350 | | .064 | | .252 | .084 | .078 | | 2.415 | | 1.61 | 1.73 | .269 | .199 | .010 | 20100 | 5200 |
| 0225 | 2.1/4 | 2.250 | 2.420 | | .064 | | .264 | .088 | .078 | | 2.490 | | 1.66 | 1.79 | .275 | .203 | .010 | 20700 | 5600 |
| 0231 | 2.5/16 | 2.312 | 2.484 | | .063 | | .267 | .089 | .078 | | 2.560 | | 1.72 | 1.85 | .275 | .205 | .011 | 21200 | 5820 |
| 0237 | 2.3/8 | 2.375 | 2.552 | | .063 | | .275 | .091 | .078 | | 2.630 | | 1.79 | 1.91 | .275 | .207 | .011 | 21800 | 6110 |
| 0244 | 2.7/16 | 2.440 | 2.618 | | .062 | +.0015 −.000 | .276 | .092 | .078 | | 2.702 | +.040 −.030 | 1.83 | 1.96 | .285 | .205 | .012 | 22400 | 6350 |
| 0250 | 2.1/2 | 2.500 | 2.684 | | .062 | | .285 | .095 | .078 | | 2.775 | | 1.89 | 2.02 | .285 | .210 | .012 | 23000 | 6710 |
| 0256 | 2.9/16 | 2.562 | 2.750 | | .078 | | .291 | .097 | .093 | | 2.844 | | 1.93 | 2.07 | .295 | .222 | .012 | 28000 | 7020 |
| 0262 | 2.5/8 | 2.625 | 2.820 | | .077 | | .302 | .100 | .093 | | 2.910 | | 2.00 | 2.13 | .295 | .226 | .013 | 28700 | 7420 |
| 0268 | 2.11/16 | 2.688 | 2.887 | | .077 | | .308 | .102 | .093 | | 2.980 | | 2.04 | 2.18 | .305 | .236 | .013 | 29400 | 7750 |
| 0275 | 2.3/4 | 2.750 | 2.955 | | .076 | | .317 | .105 | .093 | | 3.050 | | 2.10 | 2.24 | .305 | .234 | .014 | 30100 | 8160 |
| 0281 | 2.13/16 | 2.812 | 3.020 | | .076 | | .321 | .107 | .093 | | 3.121 | | 2.16 | 2.31 | .305 | .230 | .014 | 30800 | 8510 |
| 0287 | 2.7/8 | 2.875 | 3.085 | | .076 | | .324 | .108 | .093 | ±.003 | 3.191 | | 2.21 | 2.35 | .315 | .240 | .014 | 31500 | 8780 |
| 0300 | 3 | 3.000 | 3.225 | | .074 | | .347 | .115 | .093 | | 3.325 | | 2.33 | 2.48 | .315 | .250 | .015 | 32800 | 9750 |
| 0306 | 3.1/16 | 3.062 | 3.290 | +.006 −.000 | .089 | | .351 | .117 | .109 | | 3.418 | | 2.39 | 2.54 | .318 | .254 | .015 | 39300 | 10100 |
| 0312 | 3.1/8 | 3.125 | 3.355 | | .089 | | .354 | .118 | .109 | | 3.488 | | 2.45 | 2.60 | .318 | .260 | .015 | 40100 | 10400 |
| 0315 | 3.5/32 | 3.156 | 3.388 | | .089 | | .357 | .119 | .109 | | 3.523 | | 2.48 | 2.64 | .318 | .260 | .015 | 40500 | 10600 |
| 0325 | 3.1/4 | 3.250 | 3.489 | | .089 | | .368 | .122 | .109 | | 3.623 | | 2.51 | 2.67 | .350 | .269 | .016 | 41700 | 11200 |
| 0334 | 3.11/32 | 3.346 | 3.591 | | .089 | | .377 | .125 | .109 | | 3.734 | ±.055 | 2.61 | 2.77 | .350 | .276 | .016 | 42900 | 11800 |
| 0347 | 3.15/32 | 3.469 | 3.726 | | .089 | | .395 | .131 | .109 | | 3.857 | | 2.73 | 2.90 | .350 | .294 | .017 | 44500 | 12800 |
| 0350 | 3.1/2 | 3.500 | 3.760 | | .089 | | .399 | .133 | .109 | | 3.890 | | 2.76 | 2.93 | .350 | .294 | .017 | 44900 | 13200 |
| 0354 | — | 3.543 | 3.806 | | .089 | | .396 | .132 | .109 | | 3.936 | | 2.83 | 2.97 | .350 | .292 | .018 | 45700 | 13800 |
| 0362 | 3.5/8 | 3.625 | 3.900 | | .089 | | .422 | .140 | .109 | | 4.024 | | 2.89 | 3.06 | .350 | .298 | .018 | 46500 | 14300 |
| 0375 | 3.3/4 | 3.750 | 4.040 | | .089 | +.002 −.000 | .444 | .148 | .109 | | 4.157 | | 3.01 | 3.20 | .350 | .309 | .019 | 48100 | 15700 |
| 0387 | 3.7/8 | 3.875 | 4.171 | | .089 | | .453 | .151 | .109 | | 4.291 | | 3.08 | 3.27 | .378 | .312 | .020 | 49700 | 16500 |
| 0393 | 3.15/16 | 3.938 | 4.236 | | .089 | | .456 | .152 | .109 | | 4.358 | | 3.14 | 3.33 | .378 | .320 | .020 | 50500 | 16900 |
| 0400 | 4 | 4.000 | 4.302 | | .089 | | .462 | .154 | .109 | | 4.424 | | 3.20 | 3.40 | .378 | .330 | .020 | 51300 | 17400 |
| 0412 | 4.1/8 | 4.125 | 4.433 | | .089 | | .471 | .157 | .109 | | 4.558 | | 3.33 | 3.52 | .378 | .330 | .021 | 53000 | 18300 |
| 0425 | 4.1/4 | 4.250 | 4.562 | | .089 | | .477 | .159 | .109 | | 4.691 | | 3.45 | 3.65 | .378 | .335 | .021 | 54500 | 19100 |
| 0433 | — | 4.331 | 4.647 | | .089 | | .483 | .161 | .109 | | 4.756 | ±.065 | 3.47 | 3.66 | .413 | .345 | .021 | 55600 | 19700 |
| 0450 | 4.1/2 | 4.500 | 4.824 | | .089 | | .495 | .165 | .109 | | 4.940 | | 3.63 | 3.84 | .413 | .351 | .022 | 57800 | 21000 |
| 0462 | 4.5/8 | 4.625 | 4.955 | | .089 | | .504 | .168 | .109 | | 5.076 | | 3.76 | 3.96 | .413 | .350 | .022 | 59400 | 22000 |
| 0475 | 4.3/4 | 4.750 | 5.086 | | .089 | | .513 | .171 | .109 | | 5.213 | | 3.88 | 4.09 | .413 | .370 | .023 | 61000 | 23000 |
| 0500 | 5 | 5.000 | 5.346 | | .089 | | .528 | .176 | .109 | | 5.485 | | 4.07 | 4.29 | .443 | .395 | .023 | 64200 | 24900 |
| 0525 | 5.1/4 | 5.250 | 5.612 | +.007 −.000 | .102 | +.003 −.000 | .554 | .184 | .125 | ±.004 | 5.770 | | 4.28 | 4.50 | .465 | .408 | .024 | 77300 | 27300 |
| 0537 | 5.3/8 | 5.375 | 5.739 | | .102 | | .557 | .185 | .125 | | 5.910 | | 4.41 | 4.63 | .465 | .408 | .024 | 79100 | 28100 |
| 0550 | 5.1/2 | 5.500 | 5.864 | | .102 | | .557 | .185 | .125 | | 6.066 | | 4.53 | 4.75 | .465 | .408 | .024 | 81000 | 28800 |

Standard material - carbon spring steel. Standard finish - phosphate and oil.

# NO GROOVE CIRLIPS
# M1440 & N1440

Equivalent to MIL-R-21248/MS 90707

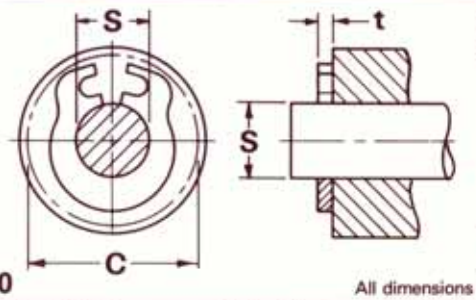


Lug design for sizes 7-9-11-19-23-27

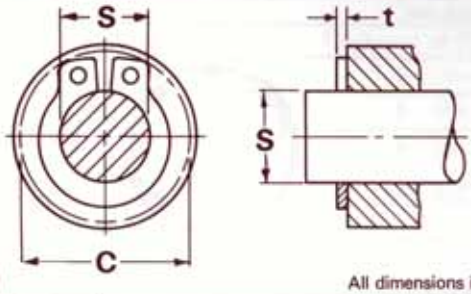


**M1440** — All dimensions in mm

| SIZE CODE | Shaft (S) S | Shaft (S) Tol. | Circlip (F) D | Circlip (F) Tol. | Circlip (F) C | Circlip (F) t | Circlip (F) Tol. | Tc+ (N) | App. pliers |
|---|---|---|---|---|---|---|---|---|---|
| 0020 | 2.0 | ±0.05 | 1.85 | ±0.05 | 6.9 | 0.60 | ±0.06 | 49 | Special pliers available on request |
| 0030 | 3.0 | | 2.84 | | 7.4 | 0.60 | | 73 | |
| 0035 | 3.5 | | 3.28 | ±0.08 | 8.3 | 0.60 | | 88 | |
| 0040 | 4.0 | | 3.79 | | 9.65 | 0.80 | | 98 | |
| 0045 | 4.5 | | 4.23 | | 10.5 | 0.80 | | 117 | |
| 0050 | 5.0 | ±0.08 | 4.75 | | 11.0 | 0.80 | ±0.08 | 127 | |
| 0060 | 6.0 | | 5.72 | | 12.6 | 1.00 | | 166 | |
| 0070 | 7.0 | | 6.71 | ±0.10 | 14.0 | 1.00 | | 176 | |
| 0080 | 8.0 | | 7.70 | | 17.3 | 1.00 | | 196 | |
| 0090 | 9.0 | | 8.66 | | 18.65 | 1.20 | | 225 | |
| 0100 | 10.0 | ±0.12 | 9.65 | ±0.12 | 19.65 | 1.20 | ±0.10 | 245 | |
| 0150 | 15.0 | | 14.50 | | 27.2 | 1.50 | | 360 | |
| 0160 | 16.0 | | 15.40 | | 27.9 | 1.50 | | 490 | |

**N1440** — All dimensions in inches

| SIZE CODE | Shaft (S) S | Shaft (S) Tol. | Circlip (F) D | Circlip (F) Tol. | Circlip (F) C | Circlip (F) t | Circlip (F) Tol. | Tc+ (lb.f) | Appl. pliers |
|---|---|---|---|---|---|---|---|---|---|
| 0007 | .079 | ±.001 | .074 | +.002 −.003 | .24 | .024 | ±.002 | 10 | HA0SS |
| 0009 | .094 | ±.002 | .089 | | .26 | .025 | | 10 | |
| 0011 | .118 | | .112 | | .29 | .024 | | 15 | |
| 0012 | .125 | | .120 | | .33 | .025 | | 20 | |
| 0015 | .156 | | .149 | | .36 | .025 | | 22 | |
| 0018 | .187 | | .180 | ±.003 | .44 | .035 | ±.003 | 25 | HA1SS |
| 0019 | .197 | | .187 | | .43 | .032 | | 30 | HA0SS |
| 0023 | .236 | | .224 | | .50 | .039 | | 35 | HA1SS |
| 0025 | .250 | | .237 | | .49 | .035 | | 35 | |
| 0027 | .276 | | 264 | | .55 | .039 | | 40 | |
| 0031 | .313 | ±.003 | .297 | ±.004 | .67 | .042 | | 45 | HA2SS |
| 0037 | .375 | | .353 | | .73 | .042 | | 60 | |
| 0043 | .437 | | .411 | | .82 | .050 | | 60 | |
| 0050 | .500 | | .469 | | .89 | .050 | | 65 | |
| 0059 | .590 | | .570 | ±.005 | 1.03 | .059 | | 80 | |
| 0062 | .625 | ±.005 | .592 | | 1.06 | .062 | ±.004 | 85 | HA3SS |
| 0075 | .750 | | .705 | | 1.31 | .062 | | 90 | |

Standard material - carbon spring steel. Standard finish - phosphate and oil.

# PUSH-ON FASTENERS
# N1305

All dimensions in inches

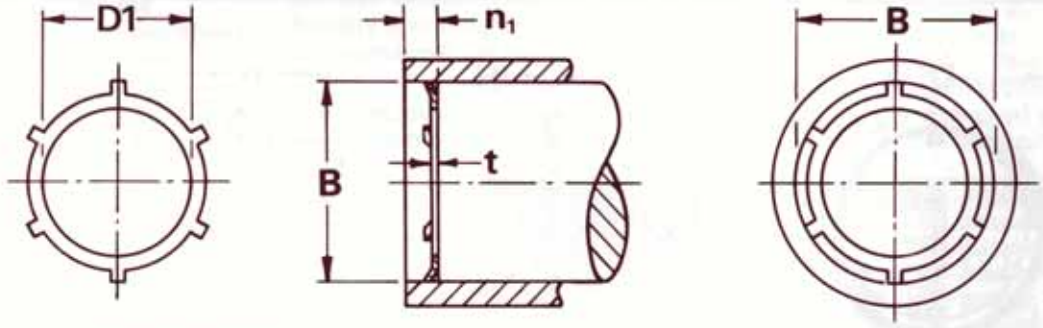


+ Typical values for mild steel bores.

*Reinforced only N1365

| SIZE CODE | Bore (B) B (min) | Bore (B) B (max) | Bore (B) B (frac.) | Circlip (F) D1 | Circlip (F) Tol. | Circlip (F) t | Circlip (F) Tol. | $n_1$ (min) | Wt kg/k | Tc + (lb.f) | SIZE CODE |
|---|---|---|---|---|---|---|---|---|---|---|---|
| 0031 | .311 | .313 | 5/16 | .136 | ±.005 | .010 | ±.001 | .040 | .05 | 80 | 0031 |
| 0037 | .374 | .376 | 3/8 | .175 | | .010 | | .040 | .07 | 75 | 0037 |
| 0043 | .437 | .439 | 7/16 | .237 | | .010 | | .040 | .09 | 70 | 0043 |
| 0050 | .498 | .502 | 1/2 | .258 | ±.010 | .010 | | .040 | .11 | 60 | 0050 |
| 0056 | .560 | .564 | 9/16 | .312 | | .010 | | .040 | .13 | 50 | 0056 |
| 0062 | .623 | .627 | 5/8 | .390 | | .010 | | .040 | .14 | 45 | 0062 |
| 0075 | .748 | .752 | 3/4 | .500 | | .015 | ±.002 | .060 | .28 | 75 | 0075 |
| 0087 | .873 | .877 | 7/8 | .625 | | .015 | | .060 | .34 | 70 | 0087 |
| 0093 | .936 | .940 | 15/16 | .687 | | .015 | | .060 | .39 | 70 | 0093 |
| 0100 | .998 | 1.002 | 1 | .750 | | .015 | | .060 | .41 | 75 | 0100 |
| 0118 | 1.185 | 1.189 | 1.3/16 | .875 | | .015 | | .060 | .63 | 70 | 0118 |
| 0125 | 1.248 | 1.252 | 1.1/4 | .938 | | .015 | | .060 | .68 | 60 | 0125 |
| *0137 | 1.371 | 1.379 | 1.3/8 | 1.050 | ±.015 | .015 | | .125 | .95 | 150 | 0137 |
| 0143 | 1.435 | 1.439 | 1.7/16 | 1.125 | | .015 | | .060 | .77 | 60 | 0143 |
| 0150 | 1.498 | 1.502 | 1.1/2 | 1.188 | ±.010 | .015 | | .060 | .82 | 60 | 0150 |
| 0175 | 1.748 | 1.752 | 1.3/4 | 1.438 | | .015 | | .060 | .95 | 55 | 0175 |
| 0200 | 1.998 | 2.002 | 2 | 1.600 | | .015 | | .060 | 1.36 | 55 | 0200 |

Standard material - carbon spring steel. Standard finish - phosphate and oil

# METRIC PUSH-ON FASTENERS
# M1465

All dimensions in mm

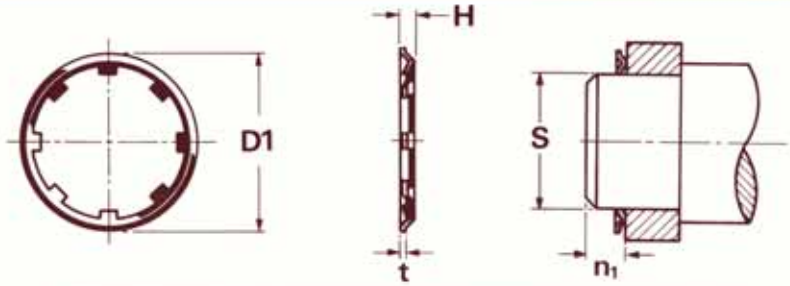


+ Typical values for mild steel shafts.

| SIZE CODE | Shaft (S) S | Tol | Circlip (F) D1 | H | t | No. of tabs | $n_1$ (min) | Wt. kg/k | Tc+ (N) | SIZE CODE |
|---|---|---|---|---|---|---|---|---|---|---|
| 0020 | 2 | | 6.5 | 0.8 | 0.25 | 3 | 1.6 | 0.05 | 147 | 0020 |
| 0030 | 3 | ±0.10 | 9.1 | 0.8 | 0.25 | 4 | 1.6 | 0.09 | 196 | 0030 |
| 0040 | 4 | | 10.1 | 0.8 | 0.25 | 5 | 1.6 | 0.11 | 196 | 0040 |
| 0050 | 5 | | 11.5 | 0.8 | 0.25 | 6 | 1.6 | 0.12 | 196 | 0050 |
| 0060 | 6 | | 12.0 | 1.0 | 0.40 | 6 | 2.0 | 0.28 | 196 | 0060 |
| 0080 | 8 | ±0.12 | 14.8 | 1.0 | 0.40 | 8 | 2.0 | 0.32 | 196 | 0080 |
| 0100 | 10 | | 17.2 | 1.2 | 0.40 | 8 | 2.4 | 0.48 | 343 | 0100 |
| 0120 | 12 | | 18.0 | 1.2 | 0.40 | 10 | 2.4 | 0.58 | 343 | 0120 |
| 0140 | 14 | | 20.5 | 1.4 | 0.40 | 10 | 2.8 | 0.68 | 441 | 0140 |
| 0150 | 15 | | 23.0 | 1.4 | 0.40 | 10 | 2.8 | 0.75 | 588 | 0150 |
| 0160 | 16 | | 24.5 | 1.4 | 0.40 | 7 | 2.8 | 0.78 | 686 | 0160 |
| 0170 | 17 | | 26.0 | 1.4 | 0.40 | 7 | 2.8 | 0.80 | 784 | 0170 |
| 0180 | 18 | ±0.15 | 27.0 | 1.6 | 0.40 | 8 | 3.2 | 0.84 | 784 | 0180 |
| 0200 | 20 | | 29.0 | 1.6 | 0.50 | 8 | 3.2 | 0.88 | 882 | 0200 |
| 0220 | 22 | | 31.0 | 1.6 | 0.50 | 12 | 3.2 | 0.93 | 882 | 0220 |
| 0250 | 25 | | 34.0 | 1.6 | 0.50 | 8 | 3.2 | 1.10 | 980 | 0250 |
| 0280 | 28 | | 37.0 | 1.8 | 0.50 | 8 | 3.6 | 1.20 | 980 | 0280 |
| 0300 | 30 | | 40.0 | 1.8 | 0.50 | 8 | 3.6 | 1.35 | 980 | 0300 |

Standard material - carbon spring steel. Standard finish - phosphate and oil

# PUSH-ON FASTENERS
# N1465 (Reinforced)

All dimensions in inches

+ Typical values for mild steel shafts.

| SIZE CODE | Shaft (S) S (min) | S (max) | S (frac.) | Circlip (F) D1 | Tol. | H | Tol. | t | Tol. | $n_1$ (min) | Wt kg/k | Tc+ (lb.f) | SIZE CODE |
|---|---|---|---|---|---|---|---|---|---|---|---|---|---|
| 0009 | .091 | .097 | 3/32 | .326 | | .029 | ±.005 | .010 | | .058 | .07 | 27 | 0009 |
| 0012 | .121 | .129 | 1/8 | .366 | | .029 | | .010 | | .058 | .09 | 38 | 0012 |
| 0015 | .152 | .160 | 5/32 | .397 | | .043 | ±.009 | .010 | | .058 | .10 | 45 | 0015 |
| 0018 | .184 | .192 | 3/16 | .460 | ±.005 | .031 | ±.007 | .010 | ±.001 | .062 | .12 | 55 | 0018 |
| 0025 | .246 | .254 | 1/4 | .522 | | .037 | | .010 | | .074 | .18 | 58 | 0025 |
| 0031 | .308 | .316 | 5/16 | .584 | | .037 | ±.008 | .010 | | .074 | .20 | 60 | 0031 |
| 0037 | .371 | .379 | 3/8 | .645 | | .037 | | .010 | | .074 | .22 | 65 | 0037 |
| 0043 | .432 | .442 | 7/16 | .766 | | .045 | ±.009 | .015 | | .090 | .44 | 120 | 0043 |
| 0050 | .495 | .505 | 1/2 | .828 | | .054 | | .015 | | .108 | .58 | 120 | 0050 |
| 0056 | .557 | .567 | 9/16 | .889 | | .054 | | .015 | ±.002 | .108 | .63 | 125 | 0056 |
| 0062 | .620 | .630 | 5/8 | .951 | ±.010 | .054 | ±.010 | .015 | | .108 | .67 | 135 | 0062 |
| 0075 | .745 | .755 | 3/4 | 1.076 | | .054 | | .015 | | .108 | .75 | 140 | 0075 |
| 0087 | .870 | .880 | 7/8 | 1.203 | | .054 | | .015 | | .108 | .89 | 140 | 0087 |
| 0100 | .995 | 1.005 | 1 | 1.327 | | .054 | | .015 | | .108 | 1.04 | 140 | 0100 |

Standard material - carbon spring steel. Standard finish - phosphate and oil

+ Note: For all push on and grooveless fasteners thrust loads have been calculated for ideal conditions (Refer to page 3 section three)

All dimensions in mm

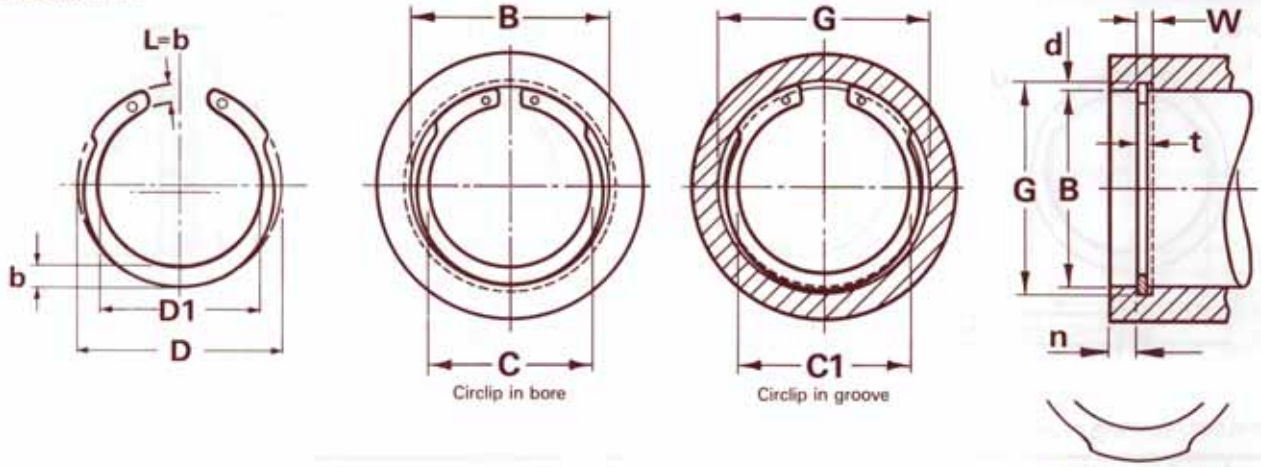


† Thrust load calculations see pages 9 & 10

| SIZE CODE | Bore (B) B | Groove (G) G | Tol. | W | Tol. | n | d ~ | Circlip (F) t | Tol. | D | Tol. | D1 ~ | C | C1 | b ~ | Tc† (N) | Tg† (N) | SIZE CODE |
|---|---|---|---|---|---|---|---|---|---|---|---|---|---|---|---|---|---|---|
| 0160 | 16 | 16.8 | +0.11 −0.00 | 1.10 | +0.14 −0.00 | 1.3 | 0.43 | 1.00 | +0.00 −0.06 | 17.3 | +0.42 −0.21 | 13.1 | 11.5 | 12.4 | 2.1 | 7800 | 1210 | 0160 |
| 0170 | 17 | 17.8 | | 1.10 | | 1.3 | 0.43 | 1.00 | | 18.3 | | 14.1 | 12.5 | 13.4 | 2.1 | 8300 | 1280 | 0170 |
| 0180 | 18 | 19.0 | | 1.10 | | 1.6 | 0.54 | 1.00 | | 19.5 | | 15.1 | 13.3 | 14.4 | 2.2 | 8800 | 1700 | 0180 |
| 0190 | 19 | 20.0 | | 1.10 | | 1.6 | 0.54 | 1.00 | | 20.5 | | 16.1 | 14.3 | 15.4 | 2.2 | 9300 | 1790 | 0190 |
| 0200 | 20 | 21.0 | +0.15 −0.00 | 1.10 | | 1.6 | 0.54 | 1.00 | | 21.5 | | 16.9 | 15.1 | 16.2 | 2.3 | 9700 | 1890 | 0200 |
| 0210 | 21 | 22.0 | | 1.10 | | 1.6 | 0.54 | 1.00 | | 22.5 | | 17.7 | 15.9 | 17.0 | 2.4 | 10200 | 1980 | 0210 |
| 0220 | 22 | 23.0 | | 1.10 | | 1.6 | 0.54 | 1.00 | | 23.5 | | 18.7 | 16.9 | 18.0 | 2.4 | 10700 | 2070 | 0220 |
| 0240 | 24 | 25.2 | | 1.30 | | 2.0 | 0.65 | 1.20 | | 25.9 | | 20.3 | 18.1 | 19.4 | 2.8 | 14000 | 2710 | 0240 |
| 0250 | 25 | 26.2 | | 1.30 | | 2.0 | 0.65 | 1.20 | | 27.1 | | 21.7 | 18.9 | 20.2 | 2.9 | 14600 | 2830 | 0250 |
| 0260 | 26 | 27.2 | +0.21 −0.00 | 1.30 | | 2.0 | 0.65 | 1.20 | | 27.9 | | 21.9 | 19.7 | 21.0 | 3.0 | 15200 | 2940 | 0260 |
| 0270 | 27 | 28.4 | | 1.30 | | 2.3 | 0.75 | 1.20 | | 29.1 | | 23.1 | 20.7 | 22.2 | 3.0 | 15800 | 3560 | 0270 |
| 0280 | 28 | 29.4 | | 1.30 | | 2.3 | 0.75 | 1.20 | | 30.1 | +0.50 −0.25 | 23.9 | 21.5 | 23.0 | 3.1 | 16400 | 3690 | 0280 |
| 0300 | 30 | 31.4 | | 1.30 | | 2.3 | 0.75 | 1.20 | | 32.1 | | 25.7 | 23.3 | 24.8 | 3.2 | 17500 | 3960 | 0300 |
| 0320 | 32 | 33.7 | | 1.30 | | 2.8 | 0.91 | 1.20 | | 34.4 | | 27.8 | 25.1 | 26.9 | 3.3 | 18700 | 5130 | 0320 |
| 0330 | 33 | 34.7 | | 1.30 | | 2.8 | 0.91 | 1.20 | | 35.5 | | 28.9 | 26.1 | 27.9 | 3.3 | 19300 | 5290 | 0330 |
| 0350 | 35 | 37.0 | | 1.60 | | 3.2 | 1.06 | 1.50 | | 37.8 | | 31.0 | 27.9 | 30.0 | 3.4 | 25600 | 6600 | 0350 |
| 0360 | 36 | 38.0 | +0.25 −0.00 | 1.60 | | 3.2 | 1.06 | 1.50 | | 38.8 | | 31.6 | 28.5 | 30.6 | 3.6 | 26300 | 6790 | 0360 |
| 0380 | 38 | 40.0 | | 1.60 | | 3.2 | 1.06 | 1.50 | | 40.8 | | 33.2 | 30.1 | 32.2 | 3.8 | 27800 | 7160 | 0380 |
| 0400 | 40 | 42.5 | | 1.85 | | 4.0 | 1.31 | 1.75 | | 43.5 | +0.78 −0.39 | 35.1 | 31.0 | 33.7 | 4.2 | 28300 | 9420 | 0400 |
| 0420 | 42 | 44.5 | | 1.85 | | 4.0 | 1.31 | 1.75 | | 45.5 | | 37.1 | 33.0 | 35.7 | 4.2 | 29700 | 9900 | 0420 |
| 0450 | 45 | 47.5 | | 1.85 | | 4.0 | 1.31 | 1.75 | | 48.5 | | 39.7 | 35.6 | 38.7 | 4.4 | 31800 | 10600 | 0450 |
| 0470 | 47 | 49.5 | | 1.85 | | 4.0 | 1.31 | 1.75 | | 50.5 | +0.92 −0.46 | 41.1 | 37.0 | 39.7 | 4.7 | 33300 | 11100 | 0470 |
| 0480 | 48 | 50.5 | | 1.85 | | 4.0 | 1.33 | 1.75 | | 51.5 | | 42.1 | 38.0 | 40.7 | 4.7 | 34000 | 11300 | 0480 |
| 0500 | 50 | 53.0 | | 2.15 | | 4.8 | 1.58 | 2.00 | +0.00 −0.07 | 54.2 | | 43.8 | 39.0 | 42.2 | 5.2 | 40500 | 14100 | 0500 |
| 0520 | 52 | 55.0 | | 2.15 | | 4.8 | 1.58 | 2.00 | | 56.2 | | 45.8 | 41.0 | 44.2 | 5.2 | 42000 | 14700 | 0520 |
| 0550 | 55 | 58.0 | | 2.15 | | 4.8 | 1.58 | 2.00 | | 59.2 | | 48.8 | 44.0 | 47.2 | 5.2 | 44500 | 15500 | 0550 |
| 0570 | 57 | 60.0 | | 2.15 | | 4.8 | 1.58 | 2.00 | | 61.2 | | 50.8 | 46.0 | 49.2 | 5.2 | 46100 | 16100 | 0570 |
| 0580 | 58 | 61.0 | +0.30 −0.00 | 2.15 | | 4.8 | 1.58 | 2.00 | | 62.2 | | 51.8 | 47.0 | 50.2 | 5.2 | 46900 | 16400 | 0580 |
| 0600 | 60 | 63.0 | | 2.15 | | 4.8 | 1.58 | 2.00 | | 64.2 | | 53.8 | 49.0 | 52.2 | 5.2 | 48500 | 17000 | 0600 |
| 0620 | 62 | 65.0 | | 2.15 | | 4.8 | 1.58 | 2.00 | | 66.2 | | 55.8 | 51.0 | 54.2 | 5.2 | 50200 | 17500 | 0620 |
| 0650 | 65 | 68.0 | | 2.65 | | 4.8 | 1.58 | 2.50 | | 69.2 | | 57.8 | 52.7 | 56.0 | 5.7 | 65700 | 18400 | 0650 |
| 0670 | 67 | 70.0 | | 2.65 | | 4.8 | 1.58 | 2.50 | | 71.5 | | 60.1 | 54.7 | 58.0 | 5.7 | 67800 | 18900 | 0670 |
| 0680 | 68 | 71.0 | | 2.65 | | 4.8 | 1.58 | 2.50 | | 72.5 | | 61.1 | 55.7 | 59.0 | 5.7 | 68800 | 19200 | 0680 |
| 0720 | 72 | 75.0 | | 2.65 | | 4.8 | 1.58 | 2.50 | | 76.5 | | 64.5 | 59.1 | 62.4 | 6.0 | 72800 | 20400 | 0720 |
| 0800 | 80 | 83.5 | +0.35 −0.00 | 2.65 | | 5.5 | 1.84 | 2.50 | | 85.5 | +1.08 −0.54 | 73.5 | 67.1 | 70.9 | 6.0 | 80900 | 26400 | 0800 |
| 0850 | 85 | 88.5 | | 3.15 | | 5.5 | 1.84 | 3.00 | +0.00 −0.08 | 90.5 | | 77.3 | 70.9 | 74.7 | 6.6 | 108300 | 28000 | 0850 |

Standard material - carbon spring steel. Standard finish - phosphate and oil.

All dimensions in mm

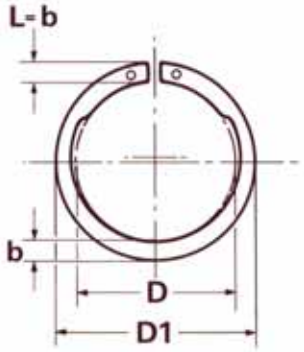

Circlip on shaft

Circlip in groove

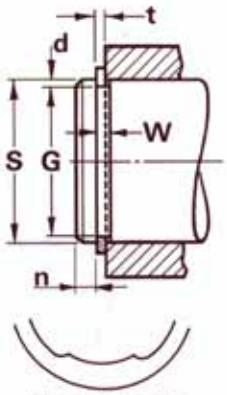


Beam configuration on some larger sizes

† Thrust load calculations see pages 9 & 10

| SIZE CODE | Shaft S | Groove (G) G | Tol. | W | Tol. | n. | d ~ | Circlip (F) t | Tol. | D | Tol. | D1 ~ | C | C1 | b ~ | Tc† (N) | Tg† (N) | SIZE CODE |
|---|---|---|---|---|---|---|---|---|---|---|---|---|---|---|---|---|---|---|
| 0120 | 12 | 11.5 | +0.00 −0.11 | 1.10 | +0.14 −0.00 | 0.9 | 0.27 | 1.00 | +0,00 −0.06 | 11.0 | +0.10 −0.35 | 15.2 | 16.5 | 15.9 | 2.1 | 5840 | 565 | 0120 |
| 0130 | 13 | 12.4 | | 1.10 | | 1.0 | 0.32 | 1.00 | | 11.9 | | 16.1 | 17.5 | 16.8 | 2.1 | 6330 | 735 | 0130 |
| 0140 | 14 | 13.4 | | 1.10 | | 1.0 | 0.32 | 1.00 | | 12.9 | | 17.1 | 18.5 | 17.8 | 2.1 | 6820 | 790 | 0140 |
| 0150 | 15 | 14.3 | | 1.10 | | 1.2 | 0.37 | 1.00 | | 13.8 | | 18.6 | 20.1 | 19.3 | 2.4 | 7300 | 990 | 0150 |
| 0160 | 16 | 15.2 | | 1.10 | | 1.3 | 0.42 | 1.00 | | 14.7 | | 19.7 | 21.3 | 20.4 | 2.5 | 7790 | 1210 | 0160 |
| 0170 | 17 | 16.2 | | 1.10 | | 1.3 | 0.42 | 1.00 | | 15.7 | | 20.5 | 22.1 | 21.2 | 2.4 | 8280 | 1280 | 0170 |
| 0180 | 18 | 17.0 | | 1.30 | | 1.6 | 0.52 | 1.20 | | 16.5 | | 21.7 | 23.5 | 22.4 | 2.6 | 10500 | 1700 | 0180 |
| 0200 | 20 | 19.0 | +0.00 −0.15 | 1.30 | | 1.6 | 0.53 | 1.20 | | 18.5 | +0.13 −0.42 | 24.1 | 25.9 | 24.8 | 2.8 | 11700 | 1890 | 0200 |
| 0220 | 22 | 21.0 | | 1.30 | | 1.6 | 0.53 | 1.20 | | 20.5 | | 26.9 | 28.7 | 27.6 | 3.2 | 12900 | 2070 | 0220 |
| 0230 | 23 | 22.0 | | 1.30 | | 1.6 | 0.53 | 1.20 | | 21.5 | | 27.7 | 29.5 | 28.4 | 3.1 | 13400 | 2170 | 0230 |
| 0240 | 24 | 22.9 | +0.00 −0.21 | 1.30 | | 1.8 | 0.60 | 1.20 | | 22.2 | +0.21 −0.42 | 28.6 | 30.7 | 29.5 | 3.2 | 14000 | 2490 | 0240 |
| 0250 | 25 | 23.9 | | 1.30 | | 1.8 | 0.60 | 1.20 | | 23.5 | | 30.8 | 32.7 | 31.5 | 3.7 | 14600 | 2590 | 0250 |
| 0260 | 26 | 24.9 | | 1.30 | | 1.8 | 0.60 | 1.20 | | 24.2 | | 31.2 | 33.3 | 32.1 | 3.5 | 15200 | 2700 | 0260 |
| 0280 | 28 | 26.6 | | 1.60 | | 2.3 | 0.75 | 1.50 | | 25.9 | | 33.5 | 35.9 | 34.4 | 3.8 | 20500 | 3690 | 0280 |
| 0300 | 30 | 28.6 | | 1.60 | | 2.3 | 0.75 | 1.50 | | 27.9 | | 35.7 | 38.1 | 36.6 | 3.9 | 21900 | 3960 | 0300 |
| 0320 | 32 | 30.3 | +0.00 −0.25 | 1.60 | | 2.8 | 0.91 | 1.50 | | 29.6 | | 37.6 | 40.3 | 38.5 | 4.0 | 23400 | 5130 | 0320 |
| 0340 | 34 | 32.3 | | 1.60 | | 2.8 | 0.91 | 1.50 | | 31.5 | +0.25 −0.50 | 38.5 | 41.3 | 39.5 | 3.5 | 24800 | 5450 | 0340 |
| 0350 | 35 | 33.0 | | 1.60 | | 3.2 | 1.06 | 1.50 | | 32.2 | | 40.6 | 43.7 | 41.6 | 4.2 | 25600 | 6600 | 0350 |
| 0400 | 40 | 37.5 | | 1.85 | | 4.0 | 1.31 | 1.75 | | 36.5 | +0.39 −0.78 | 45.9 | 50 | 47.3 | 4.7 | 28300 | 9420 | 0400 |
| 0420 | 42 | 39.5 | | 1.85 | | 4.0 | 1.31 | 1.75 | | 38.5 | | 47.9 | 52 | 49.3 | 4.7 | 29700 | 9900 | 0420 |
| 0450 | 45 | 42.5 | | 1.85 | | 4.0 | 1.31 | 1.75 | | 41.5 | | 50.9 | 55 | 52.3 | 4.7 | 31900 | 10600 | 0450 |
| 0470 | 47 | 44.5 | | 1.85 | | 4.0 | 1.31 | 1.75 | | 43.5 | | 53.5 | 57.6 | 54.9 | 5.0 | 33300 | 11100 | 0470 |
| 0480 | 48 | 45.5 | | 1.85 | | 4.0 | 1.31 | 1.75 | | 44.5 | | 54.9 | 59 | 56.3 | 5.2 | 34000 | 11300 | 0480 |
| 0500 | 50 | 47.0 | | 2.15 | | 4.7 | 1.56 | 2.00 | +0.00 −0.07 | 45.8 | | 56.2 | 61 | 57.8 | 5.2 | 40500 | 14100 | 0500 |
| 0550 | 55 | 52.0 | +0.00 −0.30 | 2.15 | | 4.8 | 1.57 | 2.00 | | 50.8 | +0.46 −0.98 | 62.4 | 67.2 | 64.0 | 5.8 | 44500 | 15500 | 0550 |
| 0580 | 58 | 55.0 | | 2.15 | | 4.8 | 1.57 | 2.00 | | 53.8 | | 65.1 | 70.2 | 67.0 | 5.8 | 46900 | 16400 | 0580 |
| 0600 | 60 | 57.0 | | 2.15 | | 4.8 | 1.57 | 2.00 | | 55.8 | +0.46 −1.10 | 67.1 | 72.2 | 69.0 | 5.8 | 48500 | 17000 | 0600 |
| 0650 | 65 | 62.0 | | 2.65 | | 4.8 | 1.57 | 2.50 | | 60.8 | | 72.5 | 77.8 | 74.6 | 6.0 | 65700 | 18400 | 0650 |
| 0700 | 70 | 67.0 | | 2.65 | | 4.8 | 1.57 | 2.50 | | 65.5 | | 78.2 | 83.8 | 80.6 | 6.5 | 70800 | 19800 | 0700 |
| 0720 | 72 | 69.0 | | 2.65 | | 4.8 | 1.57 | 2.50 | | 67.5 | | 80.2 | 85.8 | 82.6 | 6.5 | 72800 | 20400 | 0720 |
| 0750 | 75 | 72.0 | | 2.65 | | 4.8 | 1.57 | 2.50 | | 70.5 | | 83.2 | 88.8 | 85.6 | 6.5 | 75800 | 21200 | 0750 |
| 0800 | 80 | 76.0 | | 2.65 | | 5.3 | 1.75 | 2.50 | | 74.5 | | 88.2 | 94.8 | 91.1 | 7.0 | 80900 | 26400 | 0800 |
| 0820 | 82 | 78.5 | | 2.65 | | 5.3 | 1.75 | 2.50 | | 76.5 | | 90.2 | 96.8 | 93.1 | 7.0 | 82900 | 27000 | 0820 |
| 0850 | 85 | 81.5 | +0.00 −0.35 | 3.15 | +0.18 −0.00 | 5.3 | 1.75 | 3.00 | +0.00 −0.08 | 79.5 | | 94.0 | 100.6 | 96.9 | 7.4 | 103000 | 28000 | 0850 |
| 0870 | 87 | 83.5 | | 3.15 | | 5.3 | 1.75 | 3.00 | | 81.5 | | 96.0 | 102.6 | 98.9 | 7.4 | 106000 | 28700 | 0870 |
| 0900 | 90 | 86.5 | | 3.15 | | 5.3 | 1.75 | 3.00 | | 84.5 | +0.54 −1.30 | 99.0 | 105.6 | 101.9 | 7.4 | 109000 | 29700 | 0900 |
| 0950 | 95 | 91.5 | | 3.15 | | 5.3 | 1.75 | 3.00 | | 89.5 | | 105.0 | 111.8 | 108.1 | 8.0 | 115000 | 31300 | 0950 |
| 1000 | 100 | 96.5 | | 3.15 | | 5.3 | 1.75 | 3.00 | | 94.5 | | 110.0 | 116.8 | 113.1 | 8.0 | 121000 | 33000 | 1000 |

Standard material - carbon spring steel. Standard finish - phosphate and oil.

# BALANCED LUG CIRCLIPS AMERICAN SPECIFICATION
## N1308

Equivalent to MIL-R-21248/MS 16627

All dimensions in inches

Beam configuration on some larger sizes

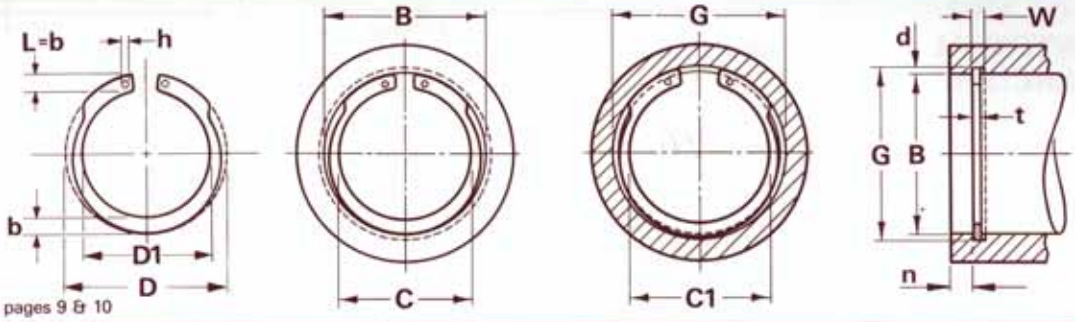


† Thrust load calculations see pages 9 & 10

| SIZE CODE | Bore (B) B (frac) | Bore (B) B (dec) | Groove (G) G | Tol | W | Tol | n (min) | d ~ | Circlip (F) t | Tol | D | Tol | D1 | C | C1 | L (max) | b ~ | h (min) | Tc† (lb.f) | Tg† (lb.f) |
|---|---|---|---|---|---|---|---|---|---|---|---|---|---|---|---|---|---|---|---|---|
| 0062 | 5/8 | .625 | .665 | ± .002 | .029 | + .003 − .000 | .060 | .020 | .025 | ± .002 | .675 | + .010 − .005 | .54 | .47 | .51 | .076 | .072 | .028 | 1100 | 353 |
| 0075 | 3/4 | .750 | .796 | | .039 | | .070 | .023 | .035 | | .808 | | .63 | .56 | .61 | .089 | .085 | .040 | 1850 | 201 |
| 0081 | 13/16 | .812 | .862 | ± .003 | .046 | | .075 | .025 | .042 | | .877 | | .69 | .61 | .66 | .097 | .092 | .040 | 2410 | 574 |
| 0087 | 7/8 | .875 | .931 | | .046 | | .085 | .028 | .042 | | .944 | | .75 | .66 | .72 | .104 | .099 | .040 | 2600 | 693 |
| 0093 | 15/16 | .938 | 1.000 | | .046 | | .095 | .031 | .042 | | 1.015 | | .81 | .70 | .77 | .111 | .106 | .040 | 2780 | 820 |
| 0100 | 1 | 1.000 | 1.066 | | .046 | | .100 | .033 | .042 | | 1.081 | | .85 | .75 | .83 | .118 | .113 | .040 | 2970 | 933 |
| 0106 | 1.1/16 | 1.062 | 1.130 | ± .004 | .056 | + .004 − .000 | .100 | .034 | .050 | | 1.150 | + .015 − .010 | .91 | .80 | .87 | .126 | .120 | .048 | 3750 | 1020 |
| 0112 | 1.1/8 | 1.125 | 1.197 | | .056 | | .110 | .036 | .050 | | 1.217 | | .97 | .85 | .93 | .129 | .123 | .048 | 3980 | 1140 |
| 0118 | 1.3/16 | 1.188 | 1.262 | | .056 | | .110 | .037 | .050 | | 1.283 | | 1.03 | .91 | .99 | .132 | .126 | .048 | 4200 | 1240 |
| 0125 | 1.1/4 | 1.250 | 1.330 | | .056 | | .120 | .040 | .050 | | 1.351 | | 1.10 | .96 | 1.06 | .135 | .129 | .048 | 4410 | 1410 |
| 0131 | 1.5/16 | 1.312 | 1.396 | | .056 | | .125 | .042 | .050 | | 1.418 | | 1.15 | 1.02 | 1.12 | .138 | .132 | .048 | 4640 | 1560 |
| 0137 | 1.3/8 | 1.375 | 1.461 | | .056 | | .130 | .043 | .050 | | 1.486 | | 1.22 | 1.08 | 1.17 | .141 | .135 | .048 | 4860 | 1670 |
| 0143 | 1.7/16 | 1.438 | 1.528 | | .056 | | .135 | .045 | .050 | | 1.552 | | 1.26 | 1.13 | 1.24 | .150 | .144 | .074 | 5080 | 1830 |
| 0150 | 1.1/2 | 1.500 | 1.594 | | .056 | | .140 | .047 | .050 | | 1.622 | | 1.32 | 1.18 | 1.28 | .154 | .148 | .074 | 5300 | 1990 |
| 0156 | 1.9/16 | 1.562 | 1.658 | | .068 | | .145 | .048 | .062 | ± .003 | 1.688 | + .020 − .013 | 1.37 | 1.22 | 1.32 | .165 | .158 | .074 | 5700 | 2120 |

Standard material - carbon spring steel. Standard finish - phosphate and oil.

# BALANCED LUG CIRCLIPS AMERICAN SPECIFICATION
## N1408

Equivalent to MIL-R-21248/MS 16626

All dimensions in inches

Beam configuration on some larger sizes

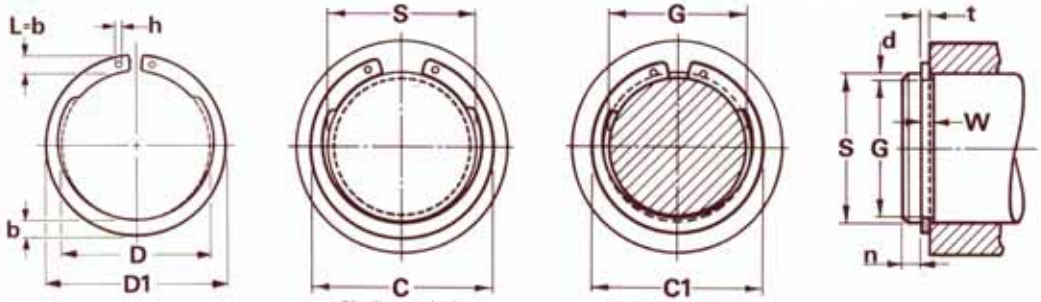


† Thrust load calculations see pages 9 & 10

| SIZE CODE | Shaft (S) S (frac) | Shaft (S) S (dec) | Groove (G) G | Tol | W | Tol | n (min) | d ~ | Circlip (F) t | Tol | D | Tol | D1 | C | C1 | L (max) | b ~ | h (min) | Tc† (lb.f) | Tg† (lb.f) |
|---|---|---|---|---|---|---|---|---|---|---|---|---|---|---|---|---|---|---|---|---|
| 0050 | 1/2 | .500 | .468 | ± .002 | .039 | + .003 − .000 | .050 | .016 | .035 | ± .002 | .461 | + .005 − .010 | .62 | .67 | .64 | .084 | .080 | .040 | 1240 | 226 |
| 0056 | 9/16 | .562 | .530 | | .039 | | .050 | .016 | .035 | | .521 | | .70 | .75 | .72 | .092 | .088 | .040 | 1390 | 254 |
| 0059 | 19/32 | .594 | .559 | ± .003 | .039 | | .050 | .017 | .035 | | .550 | | .73 | .79 | .75 | .096 | .092 | .040 | 1470 | 294 |
| 0062 | 5/8 | .625 | .588 | | .039 | | .055 | .018 | .035 | | .579 | | .78 | .83 | .79 | .100 | .096 | .040 | 1550 | 327 |
| 0068 | 11/16 | .688 | .646 | | .046 | | .065 | .021 | .042 | | .635 | | .84 | .91 | .87 | .109 | .104 | .040 | 2040 | 409 |
| 0075 | 3/4 | .750 | .704 | ± .003 | .046 | | .070 | .023 | .042 | | .693 | | .92 | .99 | .94 | .117 | .112 | .040 | 2230 | 488 |
| 0078 | 25/32 | .781 | .733 | | .046 | | .075 | .024 | .042 | | .722 | | .95 | 1.04 | .98 | .121 | .116 | .040 | 2320 | 530 |
| 0081 | 13/16 | .812 | .762 | | .046 | | .075 | .025 | .042 | | .751 | | .99 | 1.08 | 1.02 | .125 | .120 | .048 | 2410 | 574 |
| 0087 | 7/8 | .875 | .812 | | .046 | | .080 | .027 | .042 | | .810 | | 1.07 | 1.16 | 1.08 | .133 | .128 | .048 | 2600 | 668 |
| 0093 | 15/16 | .938 | .882 | | .046 | | .085 | .028 | .042 | | .867 | | 1.14 | 1.24 | 1.18 | .141 | .136 | .048 | 2780 | 743 |
| 0100 | 1 | 1.000 | .940 | | .046 | | .090 | .030 | .042 | | .925 | | 1.21 | 1.32 | 1.24 | .149 | .144 | .048 | 2970 | 848 |
| 0106 | 1.1/16 | 1.062 | .998 | ± .004 | .056 | + .004 − .000 | .096 | .032 | .050 | | .982 | + .010 − .015 | 1.28 | 1.38 | 1.31 | .153 | .147 | .076 | 3750 | 961 |
| 0112 | 1.1/8 | 1.125 | 1.059 | | .056 | | .100 | .033 | .050 | | 1.041 | | 1.34 | 1.45 | 1.38 | .156 | .150 | .076 | 3980 | 1050 |
| 0118 | 1.3/16 | 1.188 | 1.118 | | .056 | | .105 | .035 | .050 | | 1.098 | | 1.40 | 1.52 | 1.44 | .159 | .153 | .076 | 4200 | 1180 |
| 0125 | 1.1/4 | 1.250 | 1.176 | | .056 | | .110 | .037 | .050 | | 1.156 | | 1.47 | 1.59 | 1.51 | .163 | .157 | .076 | 4420 | 1310 |
| 0131 | 1.5/16 | 1.312 | 1.232 | | .056 | | .120 | .040 | .050 | | 1.214 | | 1.54 | 1.66 | 1.57 | .167 | .161 | .076 | 4640 | 1480 |
| 0137 | 1.3/8 | 1.375 | 1.291 | | .056 | | .125 | .042 | .050 | | 1.272 | | 1.60 | 1.73 | 1.64 | .171 | .165 | .076 | 4860 | 1630 |
| 0143 | 1.7/16 | 1.438 | 1.350 | | .056 | | .130 | .044 | .050 | | 1.333 | | 1.67 | 1.80 | 1.70 | .175 | .169 | .076 | 5080 | 1790 |
| 0150 | 1.1/2 | 1.500 | 1.406 | | .056 | | .140 | .047 | .050 | | 1.387 | | 1.73 | 1.87 | 1.77 | .179 | .173 | .076 | 5940 | 1990 |

Standard material - carbon spring steel. Standard finish - phosphate and oil.

## FOR 1300 INTERNAL CIRCLIPS

| PlierType | Circlip Sizes (mm) |
|---|---|
| Mini Internal | 8 |
| ISS & IBS | 14 - 63 |
| ISL & IBL | 63 - 82 |
| HC1 & HD1 | 8 - 17 |
| HC2 & HD2 | 18 - 62 |
| HC3 & HD3 | 63 - 95 |
| HC4 & HD4 | 85 - 140 |
| Major Internal | 105 - 300 |
| Super Major Internal | 260 Upwards |

| Plier Type | American Circlip Sizes |
|---|---|
| Mini Internal | 25 - 31 |
| ISS | 62 - 250 |
| ISL | 256 - 347 |
| Major Internal | 350 - 950 |
| Super Major Internal | 625 Upwards |

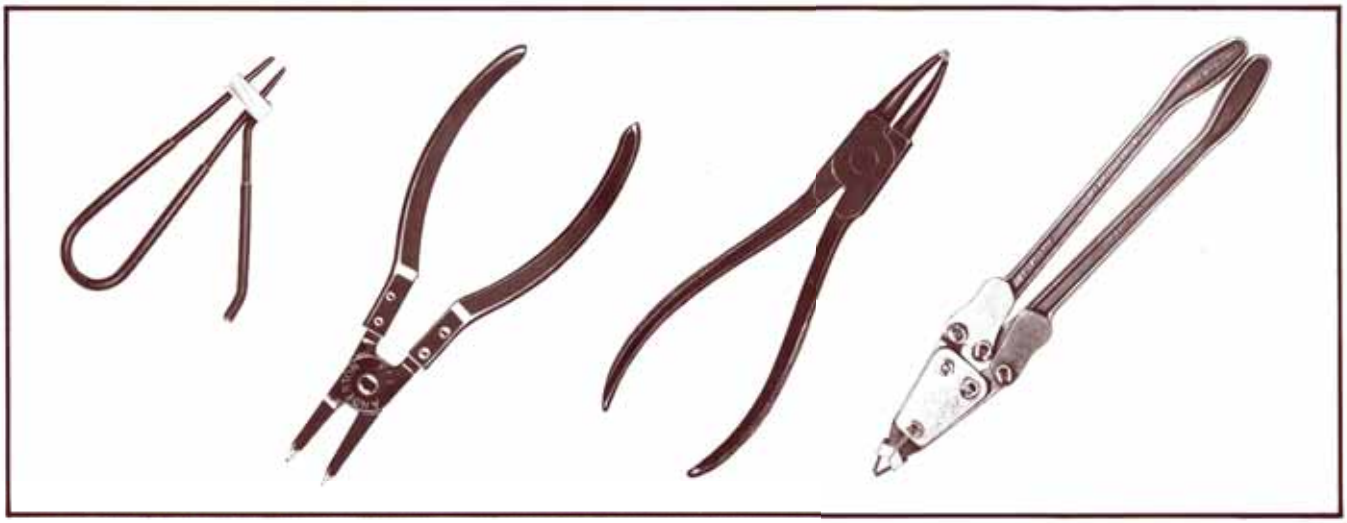

## FOR 1400 EXTERNAL CIRCLIPS

| Plier Type | Circlip Sizes (mm) |
|---|---|
| Mini A External | 3 |
| Mini B External | 4 - 5 |
| Mini C External | 6 - 9 |
| ESS & EBS | 13 - 63 |
| ESL & EBL | 65 - 82 |
| HA0 | 6 - 11 |
| HA1 & HB1 | 10 - 22 |
| HA2 & HB2 | 20 - 35 |
| HA3 & HB3 | 36 - 102 |
| HA4 & HB4 | 85 - 140 |
| Major External | 90 - 305 |
| Super Major External | 260 Upwards |

| Plier Type | American Circlip Sizes |
|---|---|
| Mini A External | 12 - 23 |
| Mini B External | 25 - 35 |
| ESS & EBS | 93 - 250 |
| ESL & EBL | 255 - 343 |
| Major External | 275 - 975 |
| Super Major External | 675 Upwards |

Anderton Applicators and Stackfeedas provide an inexpensive method of handling and applying large quantities of radial fitting circlips under mass production conditions.

Applicators as illustrated on this page are generally intended for use with a Stackfeeda but may if necessary be used independently simply by pushing the circlip against a vertical surface to effect engagement with the applicator jaws.

Stackfeedas are manufactured in two styles - the double rod type where two stacks of circlips complete with metal stacking rods, are clipped to the base, and the single fixed rod type onto which circlips are transferred from their stacking rod. Each type has a heavy base for stability and is designed such that the applicator can engage the bottom clip which is then withdrawn ready for push on fitting.

All popular types & sizes of radial fitting circlips can be supplied pre-stacked ready for Stackfeeda use. See the Stacking Guide table below.

**Stacking Guide**

| Circlip Type | Stacking Style | |
|---|---|---|
| | Double Rod | Fixed Rod |
| B1500 | Sizes to 147A | All other sizes |
| D1500 | Sizes to 6 mm | All other sizes |
| A1500 'U' | Sizes 78U, 95U | All other sizes |
| A1500 'C' | — | All sizes |
| A1500 'S' | All sizes | — |
| N1500 | Sizes to 18 | All other sizes |
| N1540 | Sizes to 18 | All other sizes |
| N1800 | Special single rod stacking | |

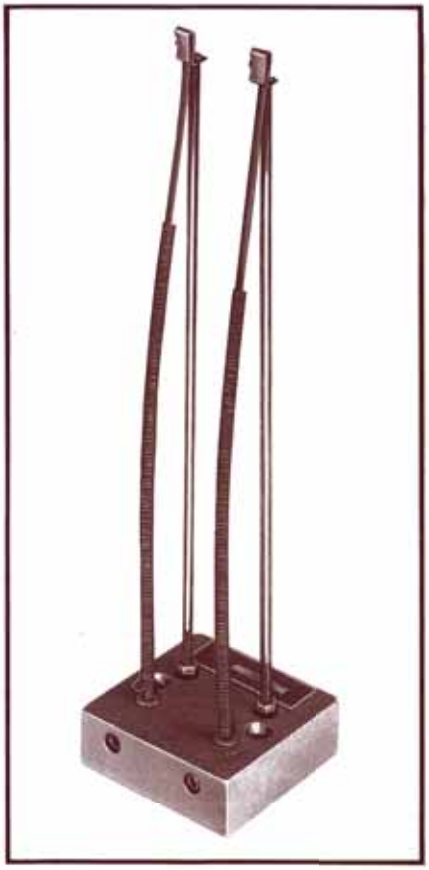

Anderton applicators are available for the above and also for circlip types A1200 & N1501

*The Stackfeedas carry a large quantity of clips and are very quickly recharged with pre-stacked items, thus ensuring uninterrupted production flow.*

Anderton Visipaks are a convenient way of buying and storing a small number of circlips of a particular type in a good range of sizes - ideal for use in all engineering repair and maintenance workshops.

Circlip types available in Visipaks are listed in the next column. A pack contains a selection of eighteen sizes each in an individual compartment which relates to a chart in the hinged lid. Actual quantities of circlips supplied vary with size - the smaller the clip the larger the quantity -and used items can be replaced by our distributors to maintain the Visipak at full complement.

| Circlip Type | Visipack Ref. | Size Range (Shaft/Bore) |
|---|---|---|
| B1300 | VP 1 | 1/4" to 1.5/8" |
| D1300 | VP 12 | 10 mm to 40 mm |
| N1300 | VP 13 | 1/4" to 1.3/8" |
| B1400 | VP 4 | 5/32" to 1.1/2" |
| D1400 | VP 15 | 4 mm to 38 mm |
| N1400 | VP 16 | 1/4" to 1.1/2" |
| B1500 | VP 7 | 0.062" to 0.250" |
| D1500 | | |
| N1500 | | 1.7 mm to 9.5 mm |
| D1500 | VP 18 | 1.2 mm to 31.5 mm |
| N1500 | VP 19 | 0.094" to 0.750" |

Version: Digital 2010-11-01 RotoPrecision Inc.

ANDERTON®

Available in Canada From:

**RotoPRECISION Inc.**
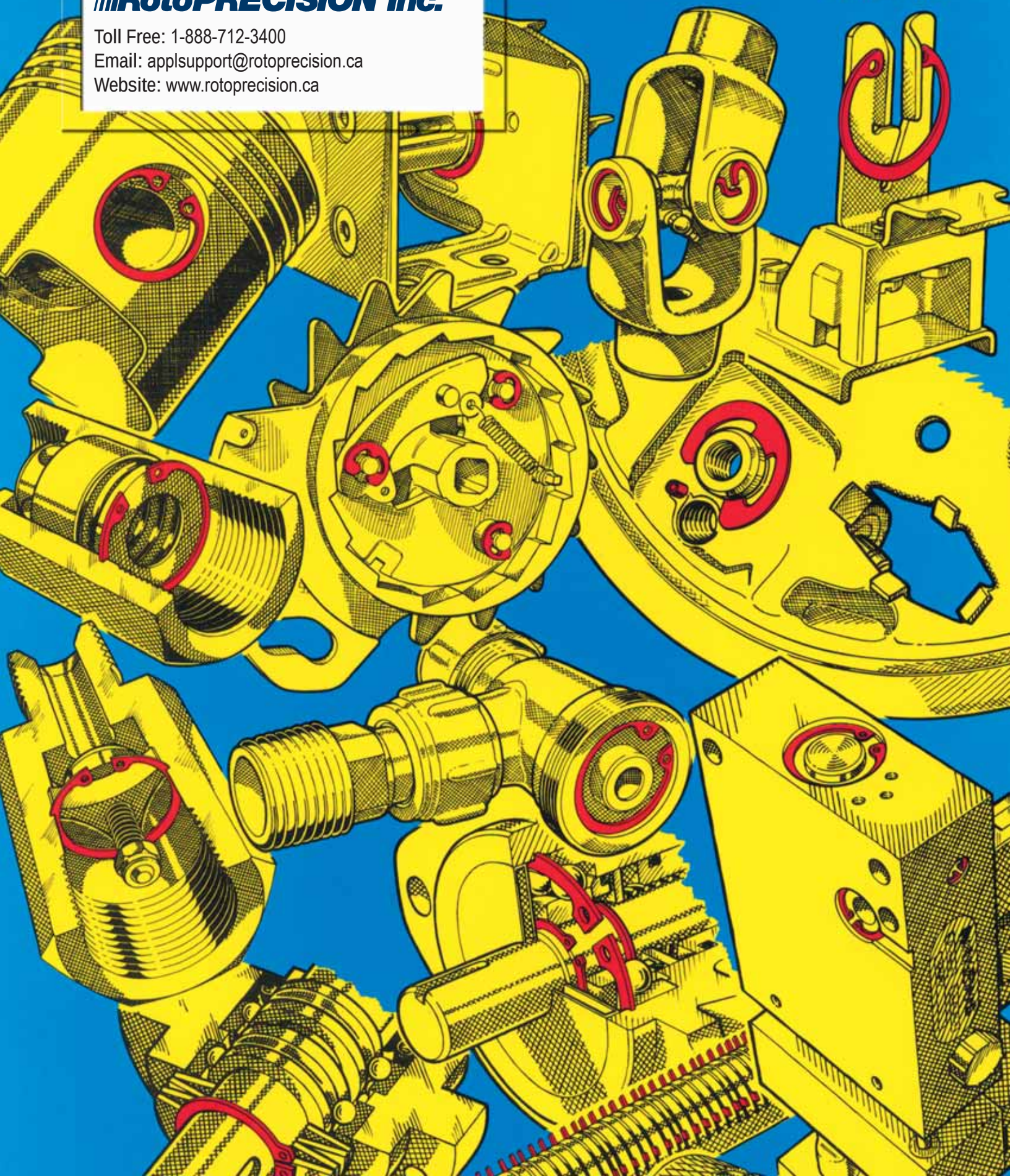
Toll Free: 1-888-712-3400
Email: applsupport@rotoprecision.ca
Website: www.rotoprecision.ca